GUILD ◆ EDITION

Woodsmith®

Woodsmith.com

Vol. 42 / No. 247

Inside:

Routing Dadoes— Get Perfect Results

Cutting Small Parts at the Table Saw

Must-Have Tools for Shaping Curves

Making Wood Threads Add a Twist to Your Next Project

EMPIRE-STYLE CHEST OF DRAWERS

Marking and Measuring Solutions

To ensure your projects measure up to your expectations, Lee Valley and Veritas® offer a broad selection of precision marking and measuring instruments that repeatedly score good marks among woodworking enthusiasts.

1. 05N56.10 Veritas® Large Saddle Square
2. 05N61.05 Veritas® 1:8 Dovetail Saddle Marker
3. 06K15.01 Lee Valley 10' Tape for Cabinetmakers
4. 05N35.01 Veritas® Precision Square, Imperial
5. 05D21.01 Veritas® Shop Knife
6. 15N05.01 Lee Valley Small Double Square
7. 05N36.31 Veritas® Micro-Adjust Wheel Marking Gauge
8. 05N70.01 Veritas® Dual Marking Gauge
9. 05N33.21 Veritas® Standard Wheel Marking Gauge
10. 05D20.05 Veritas® Workshop Striking Knife
11. 50N02.03 Lee Valley Register Caliper
12. 15N07.01 Cast Masons' & Engravers' Square

For more information on these products call or visit:

1-800-683-8170 leevalley.com

Lee Valley

from the editor

Sawdust

A few months ago, I received a visit from Ted Kralicek, the retired creative director for *Woodsmith*. For over 35 years, Ted designed and built many of the projects that have appeared in *Woodsmith*. After retiring, he moved to Bentonsport, a historic river town in southeast Iowa. Ted has recently set up a woodworking shop in an old building, where he teaches and does demonstrations of 19th-century woodworking. As part of these demonstrations, Ted designed and built his own shavehorse. (That's Ted in period costume with his shavehorse in the photo above.)

If you're not familiar with the shavehorse (sometimes called a shaving horse) it's a traditional work-holding device used by chairmakers and other green wood furniture makers to hold stock while shaping it with a drawknife or spokeshave. Although there are different variations, they all have one basic feature in common — you straddle the device as if you were riding a horse and apply clamping pressure to the workpiece using your feet.

There's some debate among woodworkers as to the effectiveness of the shavehorse. Well-known Windsor chairmaker Mike Dunbar is of the opinion that the shavehorse is an inefficient tool for holding chair parts. He argues that working from a sitting position doesn't allow you to use all your muscle groups together or move around the workpiece very easily.

On the other side of the issue, there are a number of shavehorse users who are committed to keeping traditional methods of chairmaking alive. Now, I don't have a dog in this shavehorse fight. But I'll agree that there's something quaint and appealing about the notion of sitting down at a shavehorse to turn out chair legs and spindles. It harkens back to a slower, simpler time. So, when Ted showed me the drawings for his shavehorse, I thought it would make an interesting project for *Woodsmith*.

Naturally, once you've made your shavehorse, the next question is what you'll make *with* it. Which is why we've also included plans for a shop stool in this issue (page 40). The legs and stretchers of this stool were all shaped at the shavehorse, using a drawknife and a spokeshave.

Finally, I'm happy to announce that Pam Mapes has recently joined us here at *Woodsmith* as a member of our customer service team. Welcome, Pam!

Vince

Woodsmith®

EDITOR Vincent Ancona
MULTIMEDIA EDITOR Phil Huber
ASSISTANT EDITORS Erich Lage, Logan Wittmer
CONTRIBUTING WRITER Randy Maxey

EXECUTIVE ART DIRECTOR Todd Lambirth
SENIOR ILLUSTRATOR Dirk Ver Steeg
SENIOR GRAPHIC DESIGNERS Bob Zimmerman, Becky Kralicek
CONTRIBUTING ILLUSTRATOR Erich Lage

CREATIVE DIRECTOR Chris Fitch
PROJECT DESIGNER Dillon Baker
PROJECT DESIGNER/BUILDER John Doyle
CONTRIBUTING PROJECT DESIGNER Ted Kralicek
CAD SPECIALIST Steve Johnson
SHOP CRAFTSMAN Marc Hopkins

CONTRIBUTING PHOTOGRAPHER Crayola England
SENIOR ELECTRONIC IMAGE SPECIALIST Allan Ruhnke

GROUP PUBLISHER Steven M. Nordmeyer
ADVERTISING DIRECTOR Don Schroder
610-821-4425
d.schroder@verizon.net
AD PRODUCTION COORDINATOR Kim Hoff
GROUP PRESIDENT Peter H. Miller

HOME GROUP
ACTIVE INTEREST MEDIA

Woodsmith® (ISSN 0164-4114) is published bimonthly by Cruz Bay Publishing, Inc., 2143 Grand Ave, Des Moines, IA 50312.

Woodsmith® is a registered trademark of Cruz Bay Publishing.
Copyright© 2020 Cruz Bay Publishing, Inc. An Active Interest Media Company. All rights reserved.

Subscriptions: Single copy: $6.95.
Canadian Subscriptions: Canada Post Agreement No. 40038201. Send change of address information to PO Box 881, Station Main, Markham, ON L3P 8M6. Canada BN 82564 2911
Periodicals Postage Paid at Des Moines, IA, and at additional offices.
Postmaster: Send change of address to *Woodsmith*, Box 37274, Boone, IA 50037-0274.

Printed in U.S.A.

WoodsmithCustomerService.com

ONLINE SUBSCRIBER SERVICES

- **VIEW** your account information
- **PAY** your bill
- **RENEW** your subscription
- **CHANGE** your mailing or e-mail address

CUSTOMER SERVICE Phone: 800-333-5075 weekdays

SUBSCRIPTIONS
Customer Service
P.O. Box 842
Des Moines, IA 50304-9961
subscriptions@augusthome.com

EDITORIAL
Woodsmith Magazine
2143 Grand Avenue
Des Moines, IA 50312
woodsmith@woodsmith.com

ACTIVE INTEREST MEDIA

PRESIDENT & CEO **Andrew W. Clurman**
SENIOR VICE PRESIDENT, TREASURER & CFO **Michael Henry**
VICE PRESIDENT, AUDIENCE DEVELOPMENT **Tom Masterson**
VICE PRESIDENT, PRODUCTION & MANUFACTURING **Barb Van Sickle**
VICE PRESIDENT, PEOPLE & PLACES **JoAnn Thomas**
AIM BOARD CHAIR **Efrem Zimbalist III**

contents

No. 247 • Feb/Mar 2020

Projects

weekend project
Pet Bed 20
Angled dovetails and turned feet add a stylish touch to this practical project. Your pet never had it so good.

shop project
Shavehorse 26
Our take on the traditional shavehorse features dog holes, a V-notch for sawing, and a wood screw clamp adjustment.

designer project
Floor Lamp 34
This mid-century style floor lamp looks simple, but has enough woodworking to provide you with a challenge.

shop project
Shop Stool 40
No lathe? No problem. We built this shop stool using traditional hand tools and some power tool techniques.

heirloom project
Empire Chest of Drawers 44
A cantilevered top drawer and turned spindles and feet adorn this roomy chest of drawers.

Departments

Reader Feedback 5

from our readers
Tips & Techniques 6

all about
Nails 10

router workshop
Routing Dadoes & Grooves 14

woodworking technique
Cutting Threads in Wood 54

working with tools
Drawknives & Spokeshaves 58

mastering the table saw
Cutting Small Parts 62

READER Feedback

More Uses for Lignum Vitae

I worked for Allis-Chalmers Turbine Division, formerly S. Morgan Smith, and we supplied many lignum vitae bearings for hydroelectric power plants. The pattern shop for the company stocked lignum vitae logs to produce these bearings. The shafts ran on the end grain of the wood, which proved to be the longest-lasting way to make these bearings. (The patternmakers also made "night sticks" for the local police officers who walked the beat.)

The bearings were shipped to the plants in wet sawdust or coated completely in paraffin wax to keep the wood from checking. At the powerhouses, the bearings were stored in mesh bags and kept submerged in water until installed in the units. Just thought you might be interested in the bearing side of this wondrous material.

Tom Crooks
Spring Grove, Pennsylvania

Geography Lesson

I am enjoying the October (No. 245) issue of *Woodsmith*, but I noticed a mistake in your article on lignum vitae (page 10). In it you state that the lignum vitae tree is grown in the Caribbean, and then list Bermuda as one of the islands it grows on in the Caribbean. I believe you meant this be the Bahamas, for Bermuda is not in the Caribbean, it is much farther north.

To my knowledge, lignum vitae has never grown in Bermuda. (The only lignum vitae I've seen has been rescued from old shipwrecks, attesting to its resistance to rot.) However, it does grow in the Bahamas, and is their national tree.

Mark Fox
Devonshire, Bermuda

Editor Vincent Ancona replies: *That was my slip. You are correct, lignum vitae commonly grows in the Bahamas, not Bermuda.*

Woodworkers Helping Others

I read the Sawdust column (No. 245, p. 3) with great interest and admiration for Mr. Arlin Eastman. It is so heartwarming to hear of someone who has gone the extra mile to help his fellow man.

I would like to make you aware of another organization with the same goals. The U. S. *Men's Shed Association* was recently formed. *Men's Shed* began in Australia 20+ years ago as places for men to gather and talk while working on projects. Their motto is "Men don't talk face to face. We talk shoulder to shoulder." You can learn more about the organization at *usmenssheds.com.*

Rhea DeOliviera
Shop Foreman
Ruston Community Men's Shed
Ruston, Louisiana

Router Straightedge Guide

The shop-made straightedge guide for a router (No. 235, p. 12) is a neat idea, but it works only for a bit of the diameter for which it was designed. For a bit of another diameter, one needs another guide. I have always found it easier to determine the offset for the bit I'm using, measure, and clamp a wooden guide in place. Fast, and works fine.

Lou Becker
Skokie, Illinois

You may email comments to *Editor@Woodsmith.com*. Please include your first and last name, city, and state. Comments may be edited for length or clarity.

Woodsmith SHOP

Iowa Public Television Iptv.org — *Sponsoring Station*

RIKON, Kreg, Old Masters Since 1953 — *Major Program Underwriters*

Titebond THE PRO'S ADVANTAGE™ — *Additional Funding*

Small Sled Hold-Down

During a recent project, I needed to cut the ends of some small workpieces. I built a small crosscut sled, however I didn't have a safe way to hold the workpieces down as I made the cuts. That's when I came up with the idea that you see here.

SIMPLE MACHINE. My solution involves taking advantage of a lever to apply pressure to my workpiece as I make a cut. The lever is made from plywood and pivots on a screw that attaches it to my sled back. The foot of the lever is rounded and has adhesive-backed sandpaper attached to give a little bit of extra grip on the surface of the workpiece.

To make a cut, I just slide my workpiece in place. Pulling up on the lever causes the rounded foot to push down on the workpiece. Then, I can hold it in place as I push the sled and make the cut. I like the fact that I can quickly and easily swap out parts without having to fiddle with a threaded knob type of hold-down.

Scott Welty
Chicago, Illinois

◀ An adjustable stop block is easy to position for making repeatable cuts.

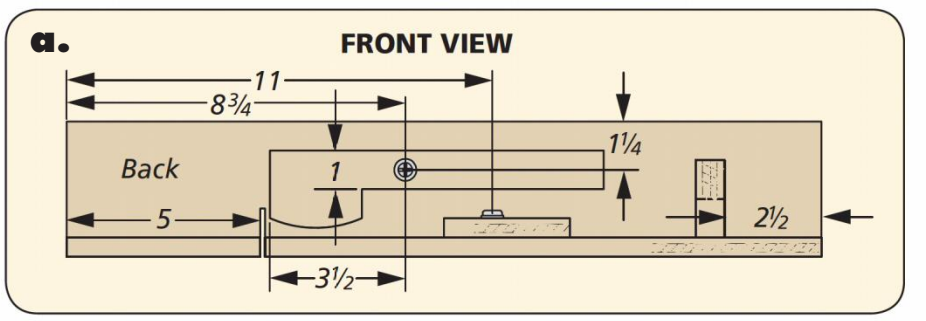

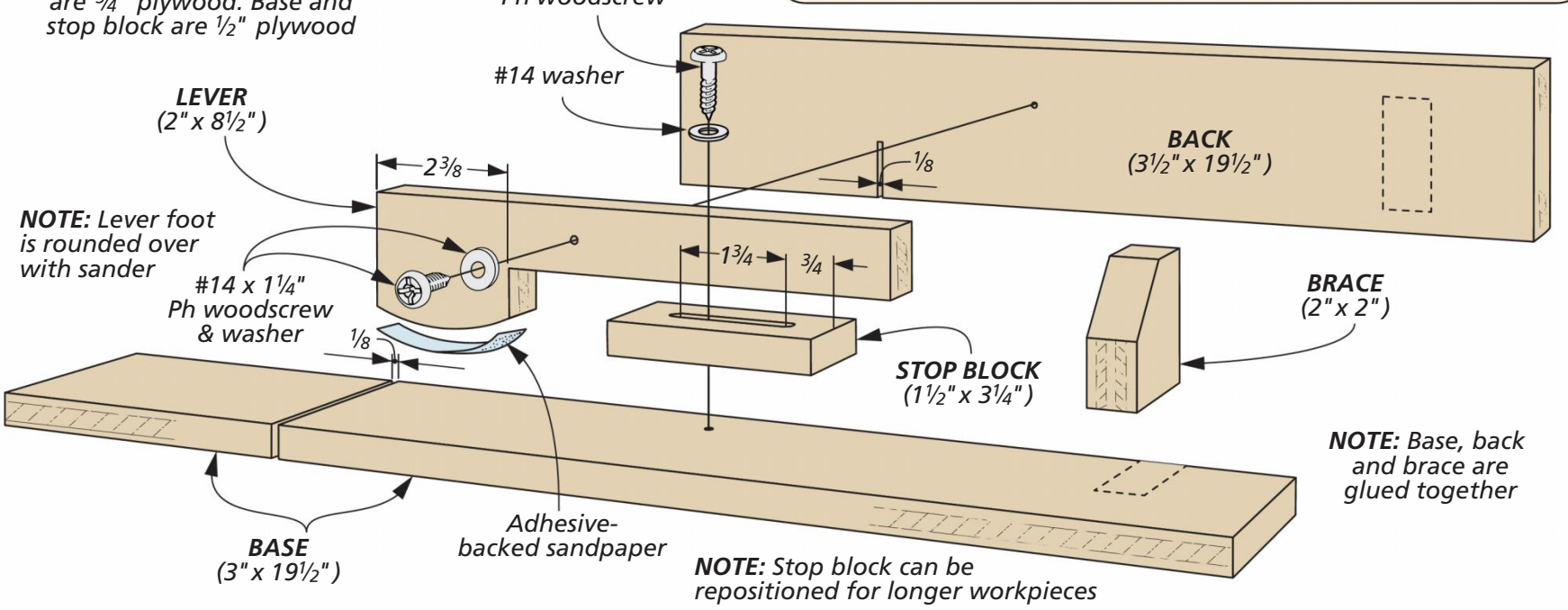

Router Fence Fine-Tuning

I use my router table often. One day, I decided to make a modification to the fence to make it easier to make fine adjustments. As you can see here, my modification is a plywood cleat clamped to the table behind the fence. A pair of threaded rods and wing nuts are installed through the bracket and attach to blocks glued onto the router fence. Now, when I need to make an adjustment, I can use the pair of wing nuts to micro-adjust the fence, then tighten them both down to lock it in place.

William Aulick
Cincinnati, Ohio

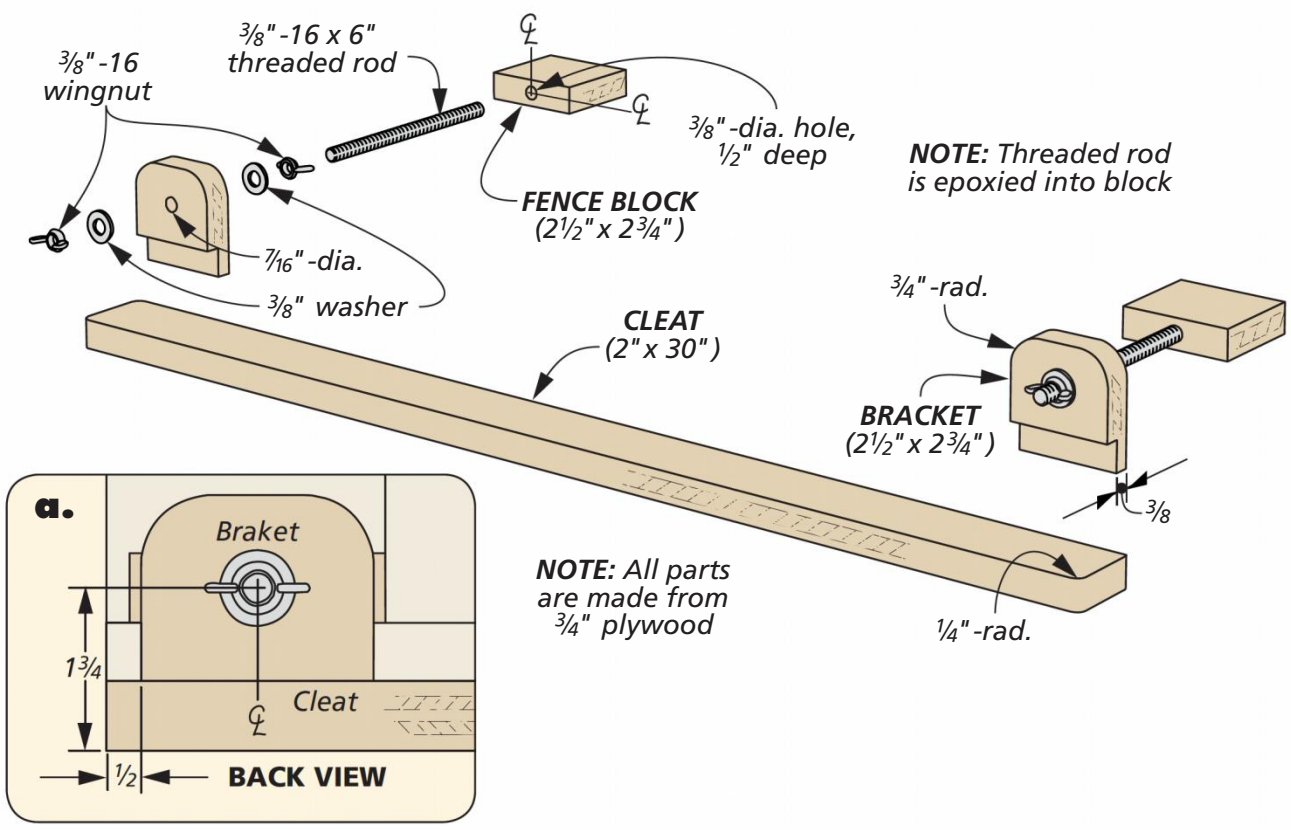

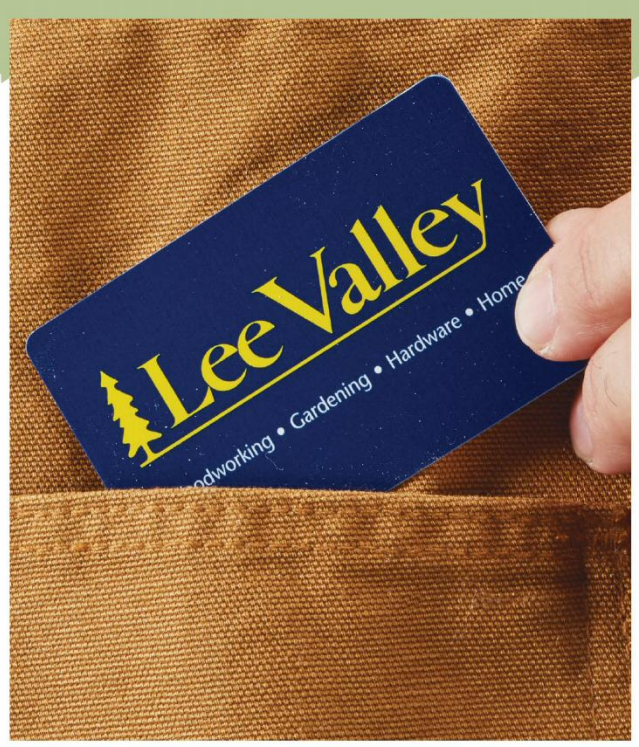

SUBMIT A TIP TO WIN

GO ONLINE

If you have an original shop tip, we would like to hear from you and consider publishing your tip in one or more of our publications. So jump online and go to:

SubmitWoodsmithTips.com

You'll be able to tell us all about your tip and upload your photos and drawings. You can also mail your tips to "Woodsmith Tips" at the editorial address shown on page 3. We will pay up to $200 if we publish your tip.

THE WINNER!

Congratulations to William Aulick, the winner of a $100 *Lee Valley* gift card.

Illustrations: Becky Kralicek

QUICK TIPS

Chamfering Edges. *Jared Huber of Appleton, WI,* found a new use for his card scraper sharpener guide. Jared realized that the 45° fence on the guide was the perfect tool to chamfer the edges of thin parts. The file leaves a smooth surface and the fence on the guide creates a consistent chamfer.

Push Pop Beeswax. *Keven Bell of Jasper, MO,* uses beeswax in a lot of different ways. He lubricates screws, uses it as a finish, and even waxes his plane soles with it. Kevin found that by melting the beeswax and pouring it into an empty push-up popsicle tube, the wax is much easier to apply when he needs to use it.

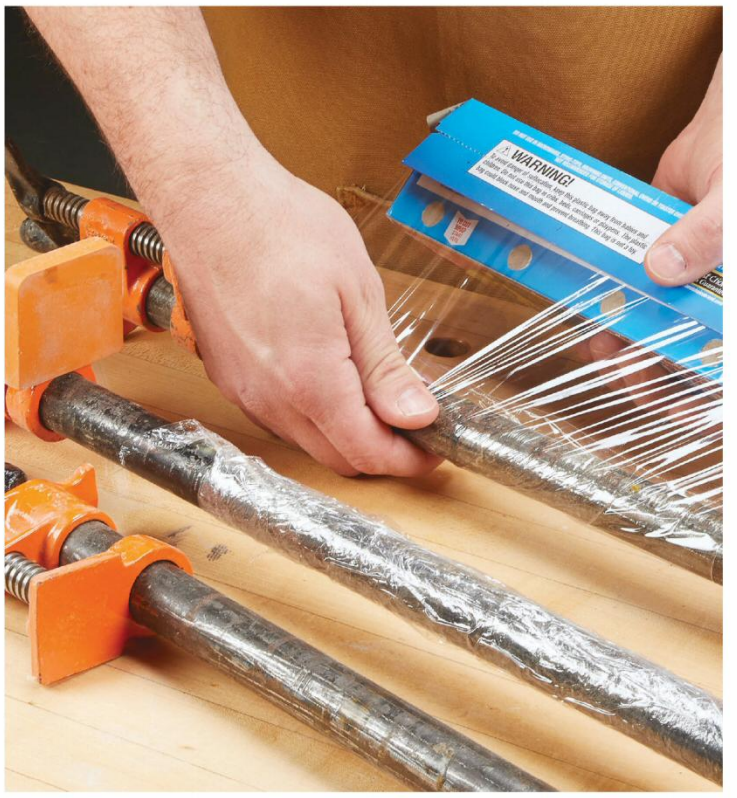

Wrap Your Clamp. *Beth Reik of Godley, TX,* got tired of cleaning dried glue off her pipe clamps. After trying a few options, Beth found that cling wrap was the perfect protection for her clamps. The cling wrap is easy to apply and when it gets glue on it, it's quick to remove. Now, Beth always has clean pipe clamps for her projects.

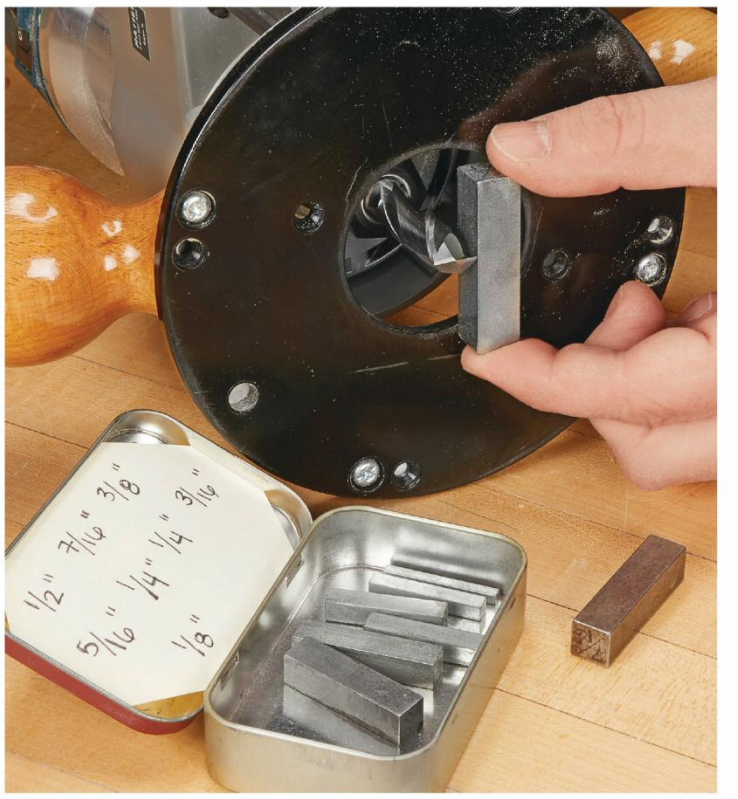

Cheap Setup Blocks. *Adam Lane of Dickson, OR,* was at the hardware store and found that keyway stock sold for machinery was ideal for using as setup blocks. It comes in a variety of sizes (often sold in short pieces) and costs only a couple of bucks a piece. Now, he has a tin of them on hand for setting up machinery.

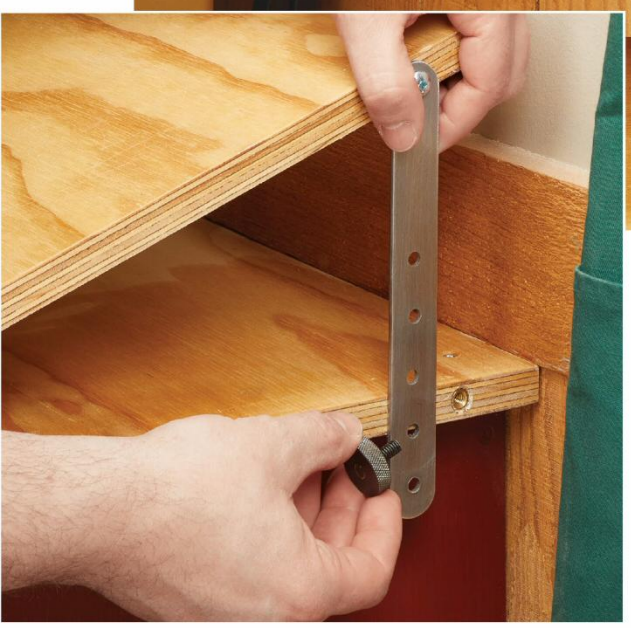

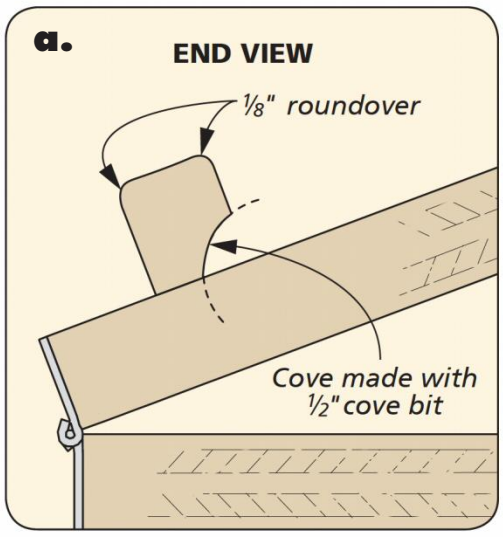

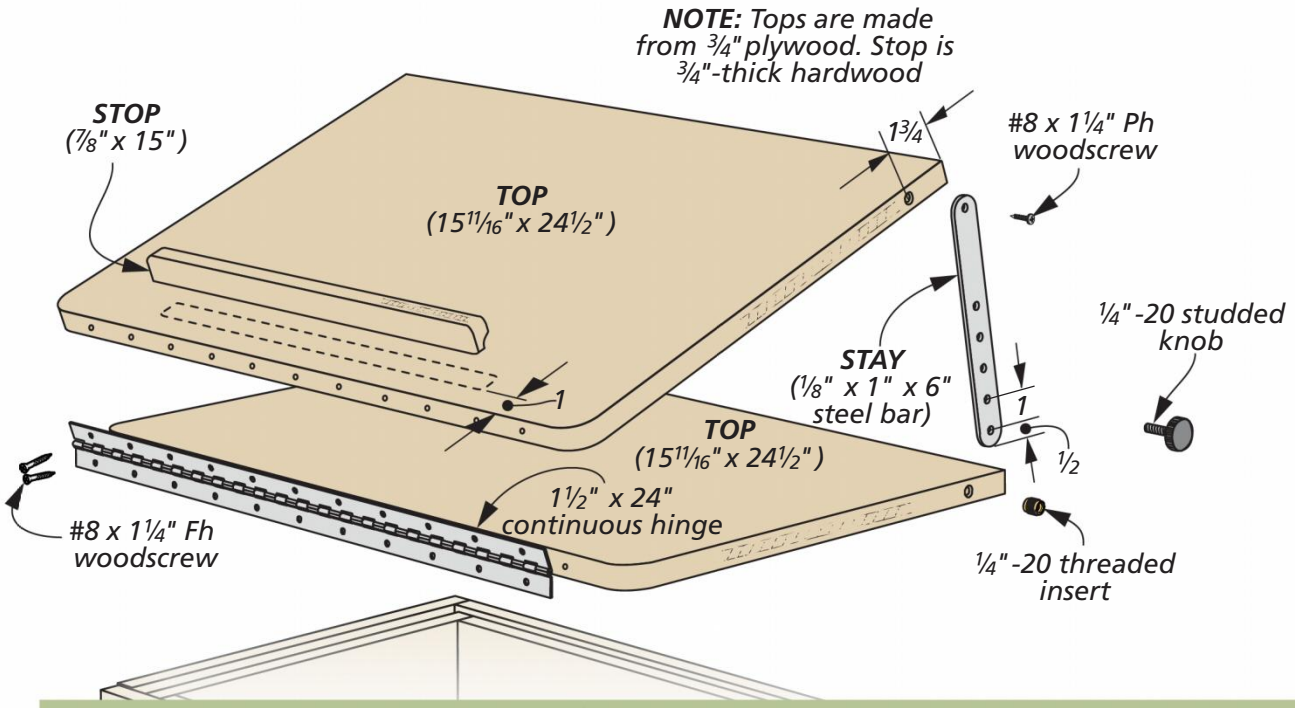

Drafting Table Conversion

In *Woodsmith* 243, I saw a reader's tip for building a bench grinder stand that hangs on the wall. I don't use a bench grinder often, but I thought I could use the stand in a different way.

TILTING TOP. The original design had a two-layer top and hung on the wall with a couple of lag bolts. The modification that I made to the stand can be seen above. I turned the stand into a drafting table to use in my shop.

This was done by installing a continous hinge between the two-layer top. This allows it to tilt to an inclined drafting position. To hold the top in the drafting position, I installed a couple of steel stays that I made. I also installed a stop to keep items from sliding off when I'm using my new drafting table.

Harold Kimple
Ankeny, Iowa

DIGITAL WOODSMITH

RECEIVE FREE ETIPS BY EMAIL

Now you can have the best time-saving secrets, solutions, and techniques sent directly to your email inbox. Simply go to:

Woodsmith.com

and click on,

Woodsmith eTips

You'll receive one of our favorite tips by email each and every week.

Nails in the Shop

Many woodworkers turn up their noses when it comes to using nails. But there are times and circumstances when nails are called for and even perform on par with traditional joinery.

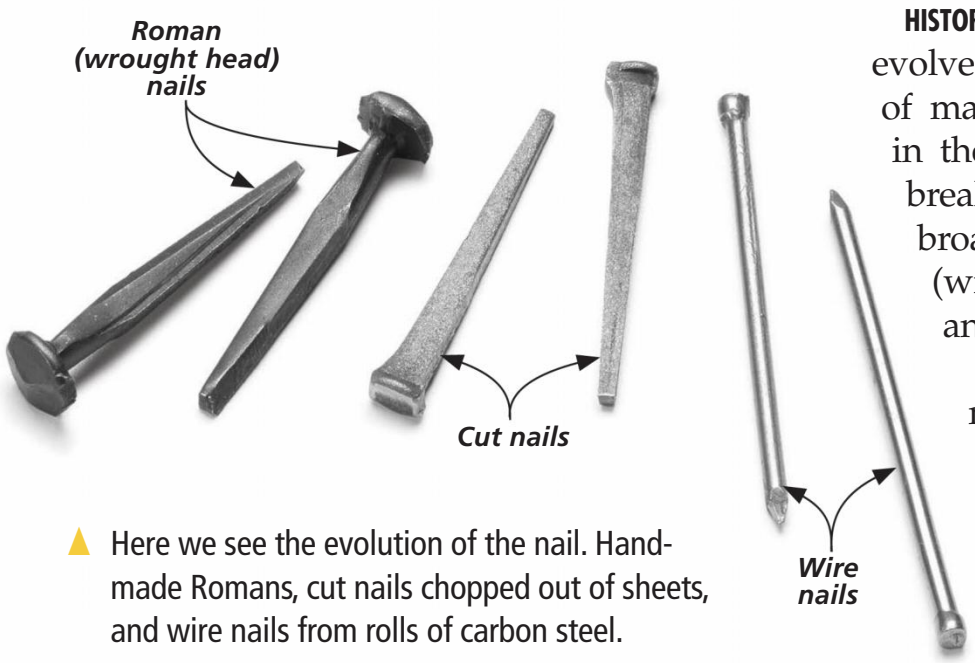

Here we see the evolution of the nail. Hand-made Romans, cut nails chopped out of sheets, and wire nails from rolls of carbon steel.

As you can see in the photo above, (and when you walk down the aisle of a hardware store) the challenge is that there's an overwhelming selection of nails to choose from.

HISTORY. In general, nails evolved along with the means of making them. As you see in the photo to the left, this breaks down into three broad categories. Roman (wrought) nails, cut nails, and wire nails.

Roman nails are hand-made and by far the most expensive option of all. Next came cut nails. These were literally cut from sheets of metal. This advancement helped lower the price, but nails were still expensive enough that when it came time to demolish a building, it would often get burnt down to harvest the nails. Wire nails are the latest incarnation and have pushed the cost of nails way down.

If you're interested in using wrought or cut nails to give a project an authentic look, you'll find sources on page 66. Here, I'm going to focus on two members of the wire nail family that you'll find handy in the shop. (Power-driven nails won't be addressed in this article.)

SIZING FIRST. You've probably heard the term "five-penny nail." This term, along with the "d" abbreviation, comes from

Written by: Erich Lage

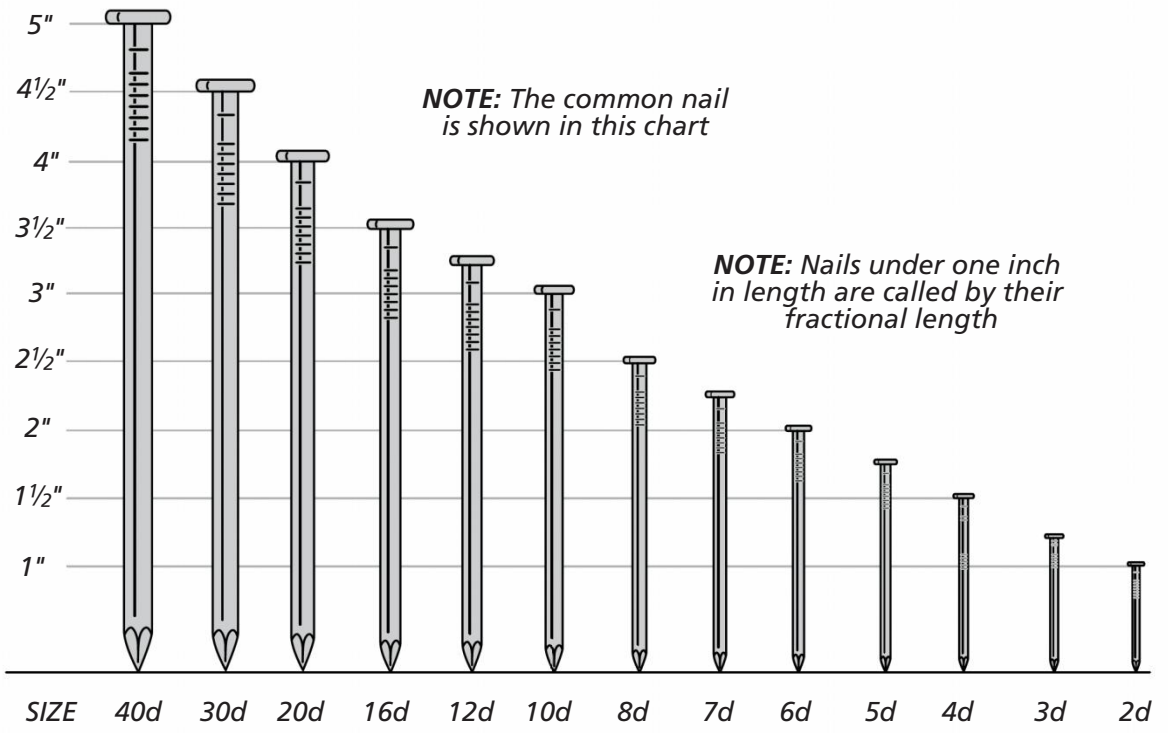

Sizing Nails. Nail sizing conventions start at one inch, which is known as a "2d" nail. Each whole number increment from there reflects a quarter inch increase in the length of the nail (up to 10d). This sizing system is generally true for all nails.

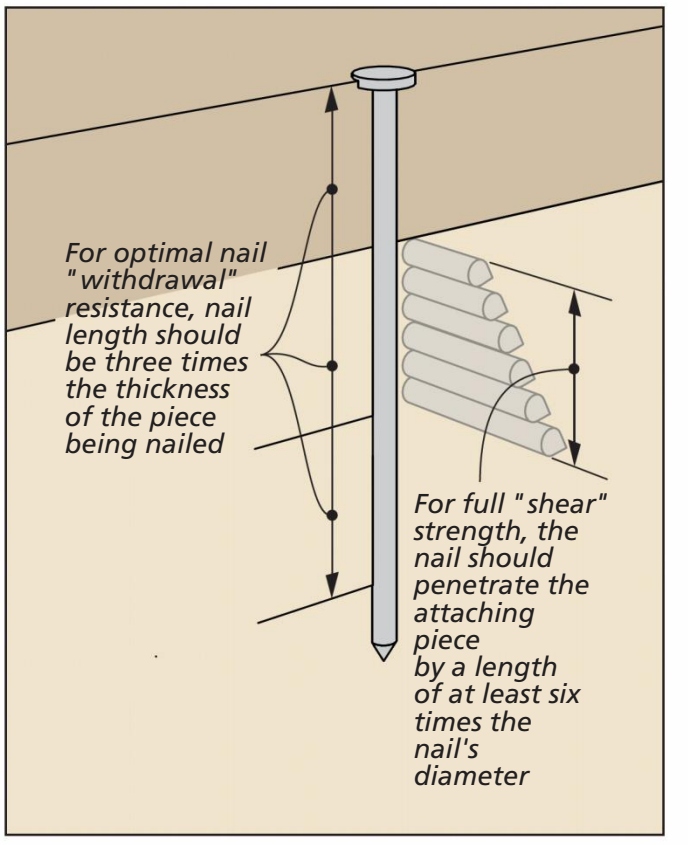

Pick the Right Nail. As you see here, the length and thickness of the nail is critical for properly fastening boards together.

English and even earlier Roman times when nails were sold by a combination of size and count. As nail making became more efficient, they moved towards being sold by weight, not count or size. What did remain, and is still handy, is the way nails are sized. The chart above shows this sizing method while focusing on the common nail.

COMMON NAIL. The common nail's main call of duty is frame carpentry and general construction. The lower left photo gives a good example of the range of common nail sizes. In the shop, you'll discover that a properly selected common nail is a tenacious ally that's quick to provide a strong but flexible solution to jigs, basic structures, and temporary building tasks.

FINISH NAIL. A finish nail is the other nail to consider keeping around the shop. The four you see in the lower right photo are the ones to have.

Finish nails are employed in furniture, cabinetry, and trim carpentry. The small head of the nail is designed to be set below the surface (with a nail set) of the joining member to conceal the fastener with wood putty.

Two main challenges any nail faces are being too easily withdrawn, or bending by shear forces. The drawing at the upper right shows how to pick a nail that works best with the wood that you're fastening.

As with any mechanical fastener, you'll want to use nails on projects where it's appropriate. But having a supply of nails on hand is worth consideration in any woodworking shop. W

Common Nail. These workhorses of modern fasteners are known by their broad head and diamond-shaped point.

Finish Nail. Finish nails have a small head that's easily set below the surface of the wood. If you don't have a nail gun these work great for woodworking and trim carpentry.

Illustrations: Bob Zimmerman

Woodpeckers®

Precision Woodworking Squares

- Guaranteed accurate to ±.0085° for life.
- One-piece blade machined to exacting tolerances.
- Wall-mountable storage case.
- Available in inch or metric.

12" 1281 Square....**$119.99**
12" 1282SS Stainless Steel Square.....**$159.99**

Precision T-Squares

- Precisely spaced 1mm holes machined every 1/16".
- Laser engraved scale accurate to ±.004".
- Outer edges machined to a 30° bevel for easy reading.
- Wall-mountable storage case.

12" TS-12 T-Square....**$94.99**
24" TS-24 T-Square.....**$129.99**

Paolini Pocket Rules

- Sliding stop simplifies repetitive marking.
- Stop doubles as stand to set router bit & saw blade height.
- Anodized aluminum or stainless steel blade with laser engraved scale accurate to ±.004".
- Available in inch, metric or combination.

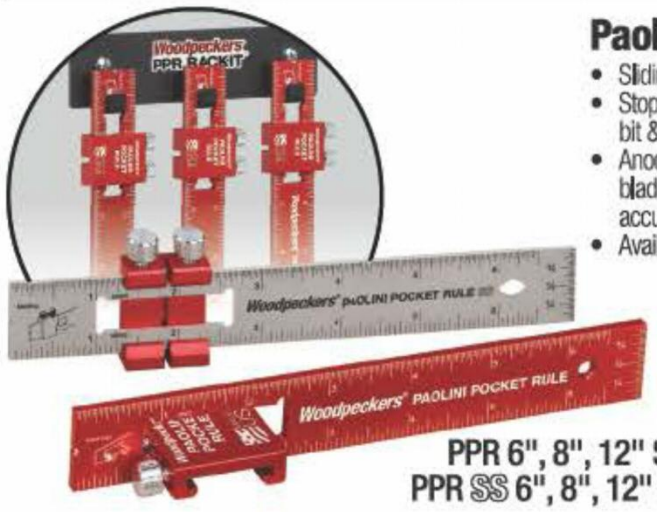

PPR 6", 8", 12" Set & Rack-It.....**$124.99**
PPR SS 6", 8", 12" Set & Rack-It....**$149.99**

Saddle T-Squares

- Scribing holes on 1/32" spacing.
- One-piece construction with 3/4" deep wrap-around marking.
- Saddle-T Rack-It holds all 4 sizes of Saddle T-Squares.
- Available in inch or metric.

Saddle T-Square Set & Rack-It.....**$299.99**

Slab Flattening Mill

- Smooth & flatten live edge slabs.
- Your router rides the rails in a controlled plane.
- Up to 62" wide & up to 12" *(with extensions)*.
- Thickness from 2" to 3-3/8".
- Optional dust collection attachment available.

Basic Slab Flattening Mill....**$799.99**

Board Mill

- Flatten face & joint edge of wide stock.
- Up to 16" wide & up to 120" *(with extensions)*.
- Thickness from 3/4" to 1-3/4".
- Integrated twin dust collection ports.

Board Mill....**$449.99**

ULTRA·SHEAR™ by Woodpeckers®

Parting Tool-Ci

- Creates crisp, clean, narrow parting cuts.
- Sharpest, longest lasting carbide inserts on the market.
- 3/32" cutting width saves stock & minimizes resistance.
- Two insert profiles:
  - Fluted cutter installed
  - Square cutter optional

Parting Tool-Ci....**$79.99**

Woodturning Tools

- Eliminate the drudgery of sharpening with nano-grain carbide inserts mounted to hardened alloy steel shafts.
- Sharpest, longest lasting carbide inserts on the market.
- Exclusive shaft design delivers both fast shaping & fine finishing.
- Square, round & detail tools available individually or as a set.

Mid-Size Woodturning Tool Set **$269.99**

Woodpeck.com

MADE IN USA

Offset Base System

Made for Festool Domino

- Attaches to both Festool Domino DF-500 & DF-700 XL.
- Wider, deeper referencing surface improves stability.
- Precision-milled spacers center mortise on standard dimensions.
- Outrigger carries stops for accurate repeat spacing.

Offset Base System with Systainer Case....$429.99

Parallel Guide System

Made for Festool Track Saws

- Makes repetitive, parallel cuts with table saw accuracy.
- Maximum rip capacity of 52".
- Narrow stock guides deliver accurate results down to 1/4".

Parallel Guide System with Systainer Case....$429.99

Universal Clamp Support

- Keeps your clamps upright & evenly spaced.
- Works with parallel jaw, bar or pipe clamps.
- Elevates work off clamps, eliminates black marks.
- Aids in squaring and aligning boards.

Universal Clamp Support.....$59.99

Miter Clamping Tool

- Directs clamping pressure across miter joints.
- Works with any brand or style of clamp.
- Two thickness sizes available, 3/4" & 1-1/2".
- Ribbed surface grips stock without marring.

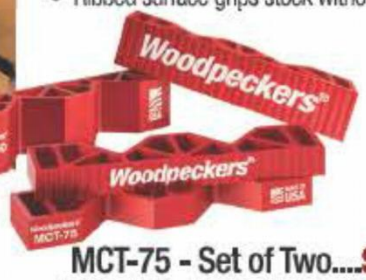

MCT-75 - Set of Two....$21.99
MCT-150 - Set of Two....$24.99

Clamping Squares PLUS & CSP Clamps

- Positions stock at right angles for joinery & fastening.
- Precision milled for both inside & outside alignment.
- Works with any clamp.
- CSP Clamps add speed & convenience.

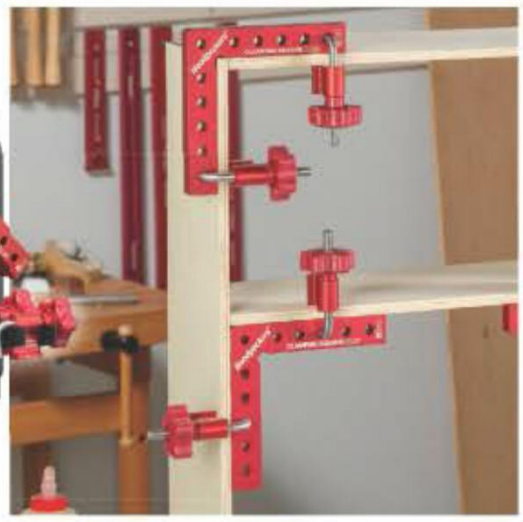

Clamping Squares PLUS Rack-It Kit....$239.99

Clamp Rack-It™

- Holds up to 6 heavy-duty parallel jaw clamps.
- Installs on any stud or solid wall surface.
- Simple installation with (2) lag bolts *(included)*.

Clamp Rack-It 4-Pack....$119.96

ULTRA·SHEAR™ by Woodpeckers®

Pen Mill-Ci

- Trims pen blanks square & flush with insert.
- Razor-sharp carbide inserts hold up to exotic materials.
- 12 Pilot Reamers cover almost every pen kit made.
- Cleanest cutting, longest lasting pen mill on the market.

Pen Mill-Ci 13-Pc Set....$169.99

Pen-Sized Woodturning Tools

- Eliminates need to resharpen.
- Sharpest, longest lasting carbide inserts on the market.
- Perfect for pens & other small turnings.
- Square, round and detail tools available individually or as a set.

Pen-Size Woodturning Tool Set $219.99

For more sizes & ordering options for these tools plus hundreds more, visit ***Woodpeck.com***

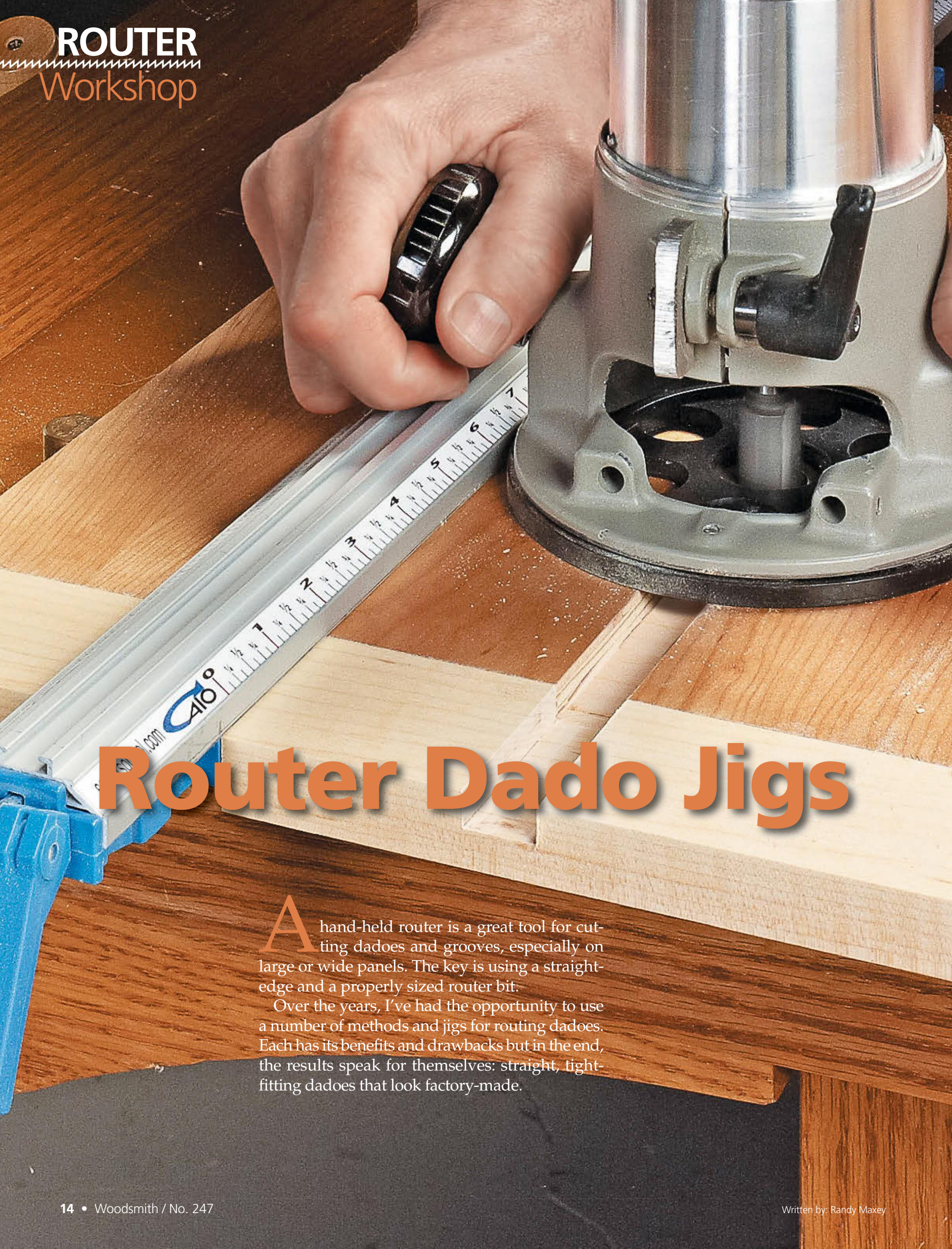

Router Dado Jigs

A hand-held router is a great tool for cutting dadoes and grooves, especially on large or wide panels. The key is using a straightedge and a properly sized router bit.

Over the years, I've had the opportunity to use a number of methods and jigs for routing dadoes. Each has its benefits and drawbacks but in the end, the results speak for themselves: straight, tight-fitting dadoes that look factory-made.

Written by: Randy Maxey

CLAMPING STRAIGHTEDGE

One of the simplest ways to get straight dadoes every time is to use a clamping straightedge, as in the photo on the previous page. These clamps quickly adapt to the width of the panel and lock securely without the need for additional clamps to hold them in place.

CALCULATING THE OFFSET. The main disadvantage of using a straightedge for this application is that you can't align it with the layout line for the location of the dado. Since the router base rides against the edge of the straightedge, you need to measure the offset from the edge of the router base to the edge of the router bit in order to locate the straightedge.

An easy solution to this problem is to attach an auxiliary fence to the clamp head, as shown in the photo on the previous page. After you make a pass with the router, you're left with a dado in the fence that you can use to quickly align with dado layout lines to position the straightedge the proper distance.

ROUTING TIPS. From here, it's just a matter of routing the dado (see the illustration below). Just be sure to use the same size router bit whenever you use this setup. I also like to make sure that the same point on the router base is always against the fence. There's no guarantee that the router's baseplate is perfectly centered on the router, so orienting the router the same way ensures a consistently straight dado.

▲ A shop-made T-square makes easy work of routing dadoes of four different widths. The offset auxiliary router baseplate is the key. Each of the four edges of the baseplate positions the centerline of the dado in a different location.

SHOP-MADE T-SQUARE

A versatile variation on this straightedge setup is shown in the photo above. It utilizes a custom, offset router baseplate. With the appropriate size of router bit, you can rout four different dado widths depending on which edge of the base is riding along the straightedge.

The baseplate is a piece of ¼" acrylic (7½" x 8"). The center of the 1" hole for the router bit is located 3" from the short edge and 3½" from the long edge. Then it's a matter of drilling holes to match your router's base to attach the baseplate. The photo above shows you where to place the markings for each dado width and orientation arrows. I use a permanent marker.

The fence for the T-square is made of ¾" plywood and the cleat is ¾" hardwood. The cleat is fastened to one end of the fence with glue and screws. Just make sure it's square to the fence before the glue sets.

Now, it's just a matter of routing dadoes in the cleat. Just be sure to use the proper diameter bit based on the orientation of the baseplate.

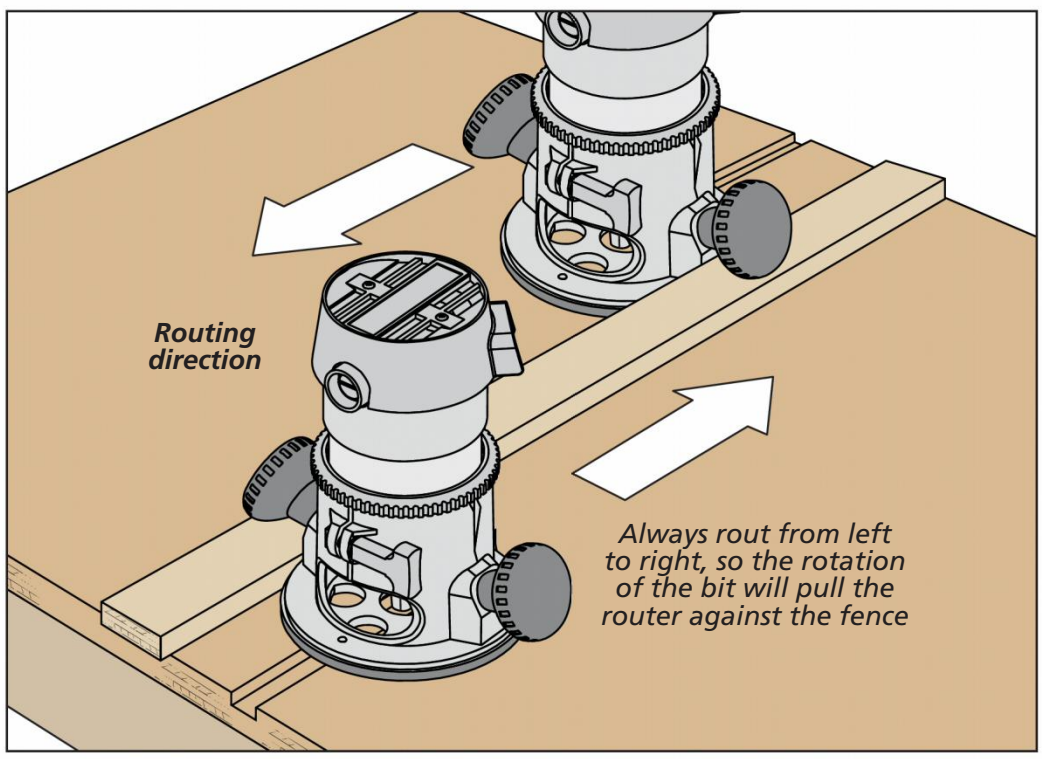

Illustrations: Bob Zimmerman

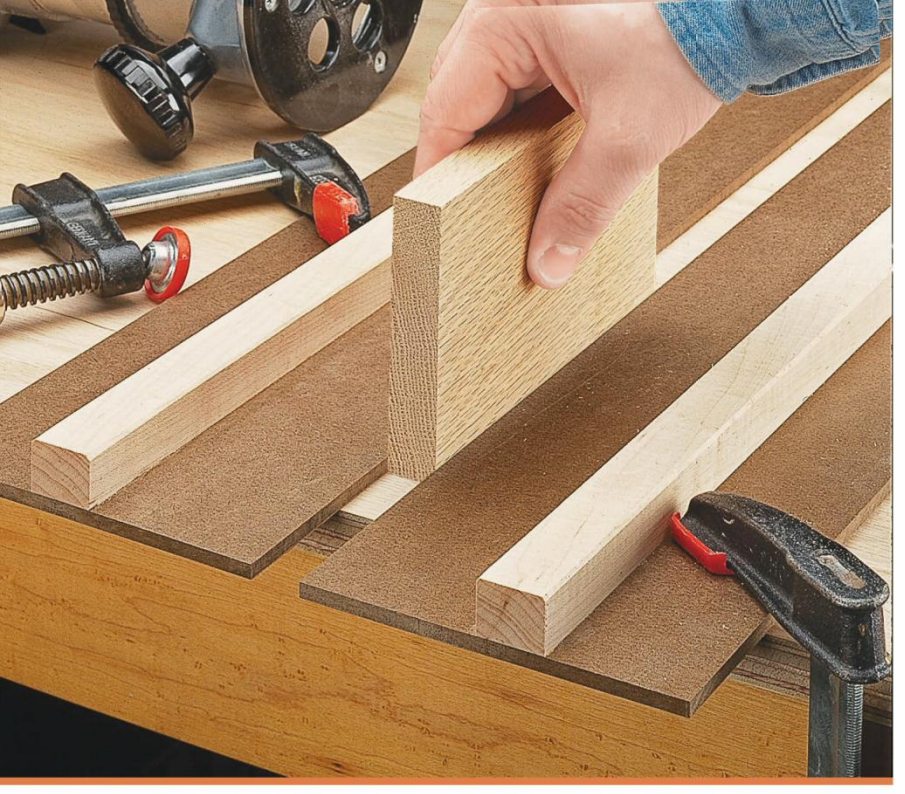

▲ Dual fences are positioned on the workpiece using a spacer to accurately set the width of the dado. Check the spacing at each end before tightening clamps.

▲ Using an undersized bit (the same bit used to trim the bases of the jigs), make two passes to create the dado. The end result is a custom, perfectly sized dado for a seamless joint.

There are other jigs you can use to rout accurate dadoes. The ones shown here are a little more sophisticated, but can help guarantee accuracy and ease of setup.

TWO STRAIGHTEDGES

The photos above illustrate a foolproof method to ensure a tight-fitting dado every time, regardless of the thickness of the mating material. The solution is a pair of identical straightedges.

Each straightedge is made from a strip of ¼" hardboard as the base with a hardwood fence. The base is made extra wide. It will be trimmed to width after the fence is installed.

Before trimming the bases to width, you need to determine the size of router bit you'll be using to cut the majority of your dadoes. This system relies on an undersized bit making two passes. For example, to rout a ¾" dado, I'll use a ½"-dia. bit. This is the bit I'll use to trim the bases of the straightedges.

Truthfully, the opposite edges of each straightedge can be trimmed using two different sizes of bits. For example, a ⅜"-dia. bit can rout dadoes from ½" to ¾" wide. If you do this, mark the edges with the size of bit used.

GUARANTEED FIT. As shown in the left photo above, use a scrap piece of the same material you'll be using to fit into the dado. Use it as a gauge to set the distance between the straightedges. Then simply make two passes, paying attention to the routing direction shown on the previous page.

FENCE & SPACER

Another simple system for routing dadoes allows you to dial in the exact width of dado needed. You can see what this looks like in the drawings at left.

This method uses a simple fence with a spacer. The dado is cut in two passes: one pass with the spacer taped in place between the fence and router and a second pass with the spacer removed. The thickness of the spacer determines the final dado width.

SNEAK UP ON IT. The beauty of this method is that you can test the spacer thickness on scrap material. I start with the spacer a little thicker than I need. Then it's a matter of sanding or using a hand plane to sneak up on the proper thickness for the desired dado width.

Like the system shown above, the spacer method requires a router bit that is smaller in diameter than the final dado width. For ¾"-wide dadoes, again I'll use a ½"-dia. router bit.

(Continued on p. 18)

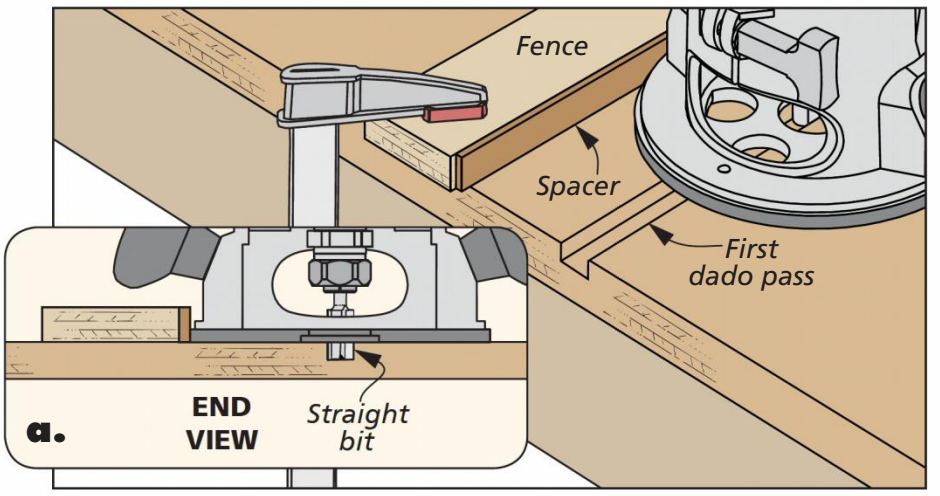

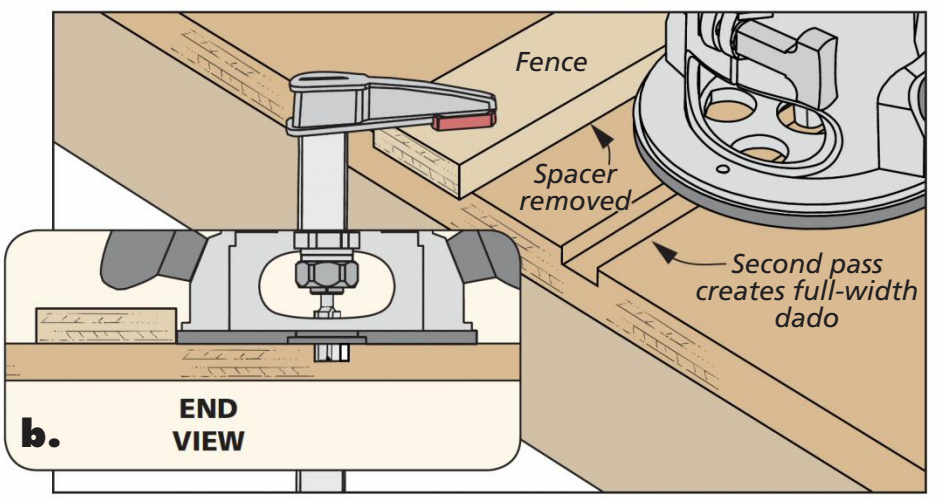

Spaced Out Dadoes. Using an undersized router bit and a spacer, you can rout dadoes that are sized perfectly for your project. Size the thickness of the spacer for a perfect width.

RIKON®

EXPANDING ← The → Possibilities

5 YEAR WARRANTY

Expandable Bed Lathe | 40" Between Centers Beefy | 3 HP VSR Motor

Beefy **3HP motor** delivers ample power to turn large diameter projects in forward or reverse modes.

Control Box has a magnetic back so that it can be set anywhere along the lathe for quick access when turning.

1-1/4" x 8 TPI threaded spindle is supported by 4 heavy-duty bearings for precise and dependable turning.

Tailstock's quill extends out to a generous **4-3/4" RAM** travel with precision Acme threading.

Call today for more information **877-884-5167**
or visit **www.rikontools.com** for a dealer near you!

HINGED STRAIGHTEDGE

The straightedge shown on the right eliminates the problem of having to account for the offset of your router base when positioning the straightedge. The secret is in the hinged, drop-down fence.

Both the base and hinged fence are made from ¾" plywood. This jig uses a router bit sized for the final dado width. To size the width of the fence, measure from the center of your router bit to the edge of the base. This will be the final width of the fence. Make the base 2" wider than the fence to provide a ledge for clamping. Use a continuous hinge to fasten the two parts together (Photo 1).

QUICK & EASY ALIGNMENT. To use the jig, lay out the centerline of your dado. Drop the fence down and align it with the layout line, as you can see in Photo 1. Clamp the base in place. Then, before routing, flip the fence over to rest on the base, as in Photo 2.

Routing the dado follows all of the standard rules (Figure 3). Keep the orientation of the router the same throughout the cut. Routing left-to-right helps pull the router into the fence. Following both of these rules ensures professional results.

▲ The hinged fence on this dado jig facilitates locating the base of the jig relative to the final location of the dado. The three-step process shown above results in quickly routing perfectly positioned dadoes every time.

ADDITIONAL TIP

There is a final thing I want to mention to help you get the best results. If you're using plywood for your project, its thickness can vary from sheet to sheet and within the same sheet. This makes routing perfectly sized dadoes in a single pass difficult. Instead, I like to use a dado jig that requires two passes, as shown on page 16. This way, you can account for minor variations in thickness.

For hardwood applications, any of these jigs are perfectly suitable, including the stopped-dado jig shown below. W

STOPPED-DADO JIG

Fast & Repeatable Stopped Dadoes. For some projects, you don't want the dado to be visible but you want the strength a dado joint provides. This jig is one solution. It features a stop to create a dado that stops short of the appearance edge of the project.

The jig is made from ½" plywood and ¼" hardboard. Dadoes in the fence form a T-track to house a carriage bolt used to lock the stop in place with a star knob. A hardboard clamping ledge extends off of one end of the cleat. A dado routed in the cleat makes it easy to align the jig with the layout line for the dado. Then simply rout until the router contacts the stop.

▲ To create stopped dadoes, a shop-made jig uses a T-track to position the stop along the fence. You can also make a similar setup using ¾" plywood and aluminum T-track. The cleat positions the fence for accurate routing.

Subscribe & Save

Get ***Popular Woodworking*** delivered right to your ***mailbox*** or ***inbox***.

popularwoodworking.com/subscribe

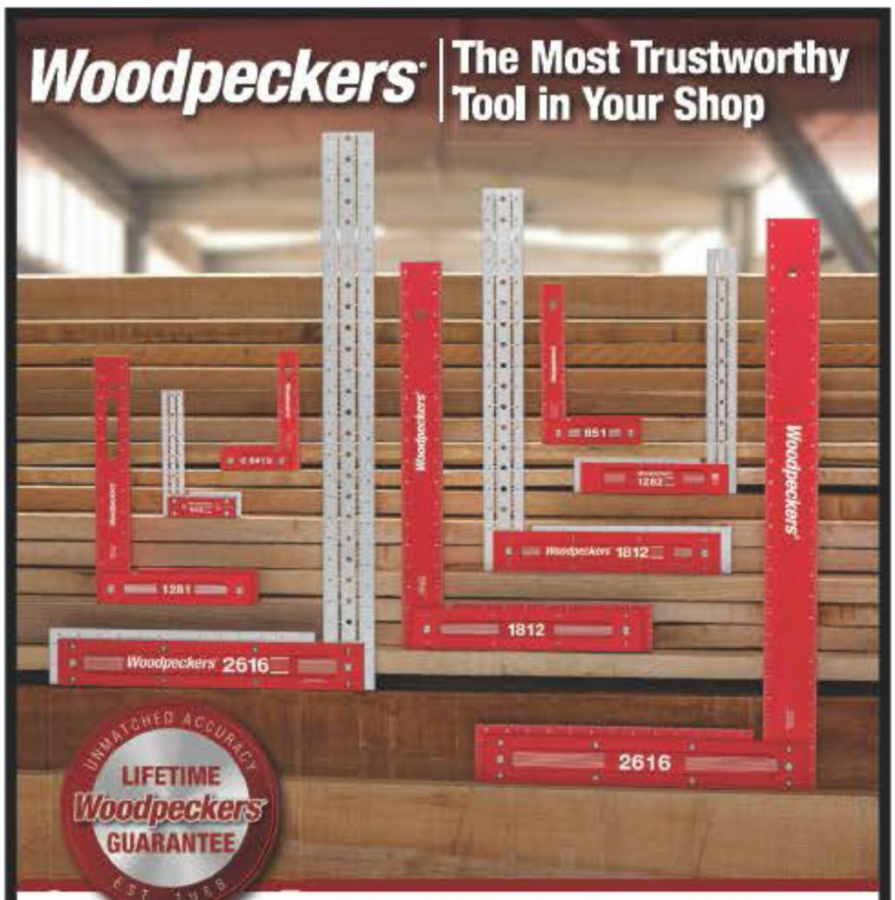

Success in the workshop depends on accurate machine set-up, precise layout and careful assembly checks. When your work matters, turn to Woodpeckers. We build squares with the finest materials, the most up-to-date manufacturing processes and stringent quality control throughout the process. *Woodpeckers will earn your trust when it matters most.*

Woodpeckers, LLC • Strongsville, Ohio • 800.752.0725 • ***woodpeck.com***

SUBSCRIBE TO LOG & TIMBER HOME LIVING AND GET A FREE GIFT!

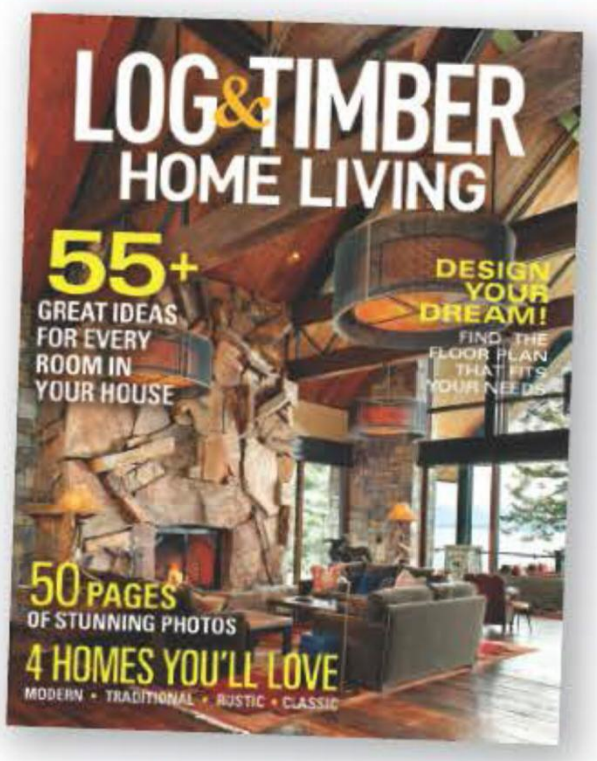

Go to LogHome.com and order today!

SUBSCRIBE TO OLD HOUSE JOURNAL & GET A FREE GIFT!

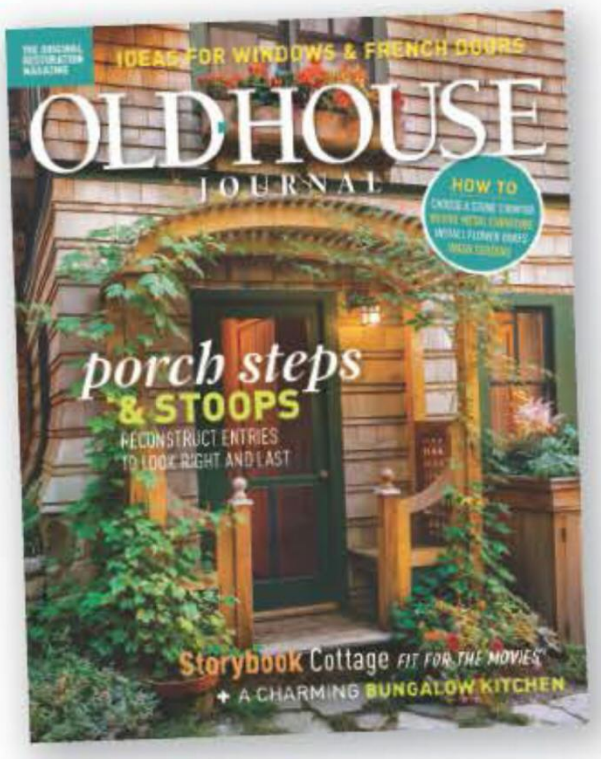

Go to OldHouseOnline.com and order today!

Written by: Vincent Ancona, Project Design: Dillon Baker

Pet Bed

A few boards and a weekend in the shop are all you need to create a cozy, comfortable bed for your favorite pet.

▲ The hardwood slats that support the mattress of the pet bed are dovetailed into the rails for a rigid connection.

Illustrator: Becky Kralicek

When I was growing up, we had a dog as a family pet. Most of the time, it slept on the floor in the living room. When it was ill (or carrying a litter of puppies), we would create a makeshift bed by lining a cardboard box with an old towel or blanket. The dog never seemed to mind either way.

But times have changed. Many dog owners today lavish as much attention on their pets as they do on their partners or their children. Whoever coined the phrase, "It's a dog's life," obviously never envisioned a pet bed like the one shown here. Made out of solid hardwood with dovetailed construction, it's a bed that's fit for a King — or a Fido. (I'll spare you any more canine-related puns and references.)

This pet bed is constructed very similar to a bed for humans. It consists of a four-sided frame with slats to support a cushion. The slats are dovetailed into rails on the sides of the frame (inset photo at left). Shallow cutouts at the front and back of the frame make it easier for the dog to climb in and out of bed. And the entire frame is supported at each corner by a turned foot.

SIZE. While the joinery on this project is stout enough to accommodate just about any size of dog, we've designed the bed for a small to medium animal. But it's a simple matter to scale it up or down to suit your pet. If you do plan on making it a different size, however, it's a good idea to purchase the mattress first, and then size the frame to fit.

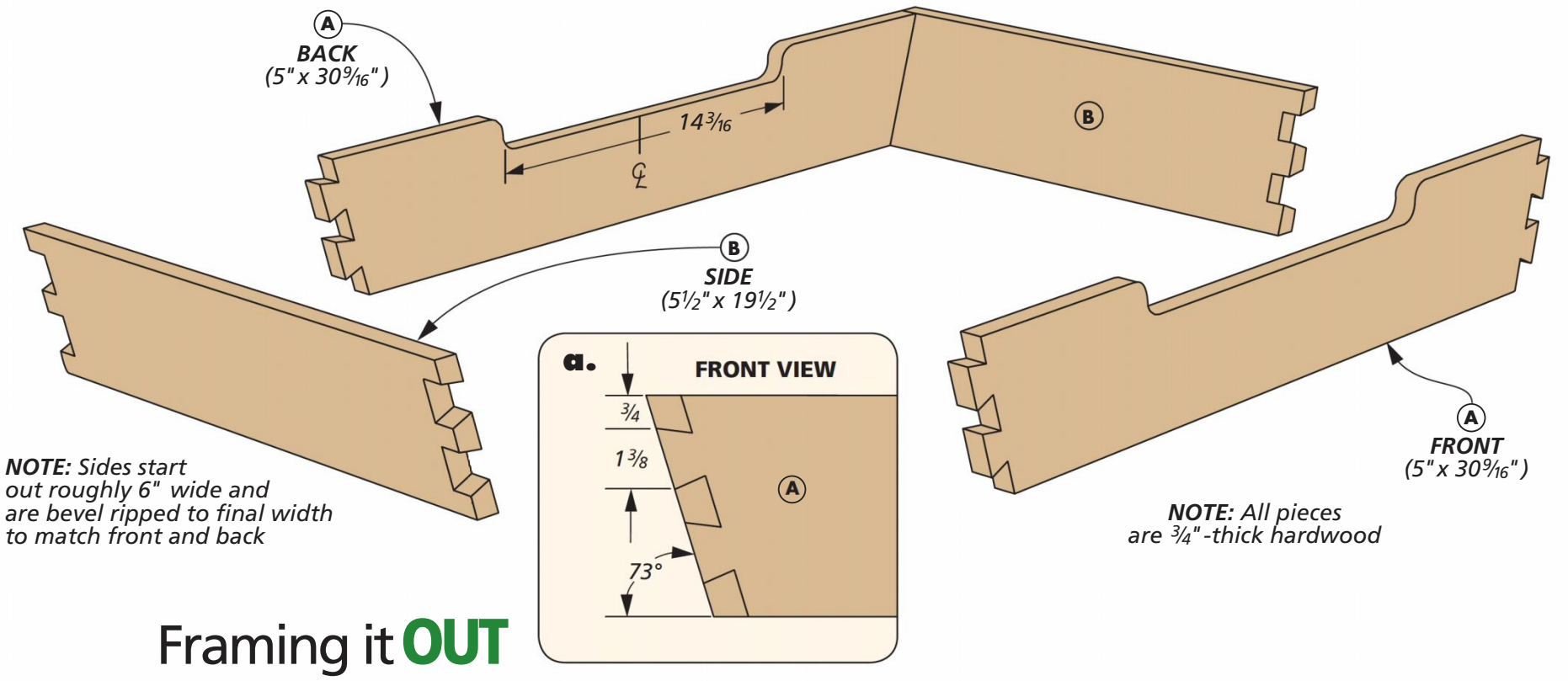

Framing it **OUT**

This pet bed is really just a shallow, open box that rests on four feet. But what gives it some style is the fact the sides of the box angle outward and are joined to the front and back with through dovetails, as you can see in the drawing above.

To make the box frame, I began by cutting the front and back pieces to size. (I used walnut for the box.) The ends of these pieces are mitered at 73°, as you see in Figure 1 in the box at right.

The sides of the box are cut to size next. But here, I started with extra-wide blanks. Then the edges of the blanks are beveled to final width. As you can see in Figure 2, the angle of this bevel is also 73° to match the angle of the front and back pieces.

DOVETAILS. With the frame pieces cut to size, you're ready to start laying out the dovetail joints. Because the dovetails are angled, the sides of the dovetails are cut at different angles. Rather than spending a lot of time on the layout, I made a hardboard template of the tail spacing. You can use the drawing in the lower left, or go to *Woodsmith.com/247* for a full-size pattern.

With my template in hand, I laid out the profiles of the dovetails on the ends of the front and back pieces. Then I used a band saw to cut out the tails, paring away any waste with a chisel. (Alternatively, you could use a hand saw or even a scroll saw.)

To lay out the pins of the dovetail joints on the sides of the frame, I held the mating pieces together and traced around the dovetails. Because the cuts required to make the pins are angled in relation to the face of the board, I opted to cut these with a hand saw rather than on the band saw. I simply clamped the workpiece in my face vise to do so. The trick here is to stay outside of the layout line and then pare the waste down with a chisel to achieve a close fit.

CUTOUT. The front and back pieces each have a shallow cutout along the top edge to make it easier for your pet to enter and exit the bed. I laid out these cutouts using the dimensions shown at left. After drilling a hole at each end of the cutout to

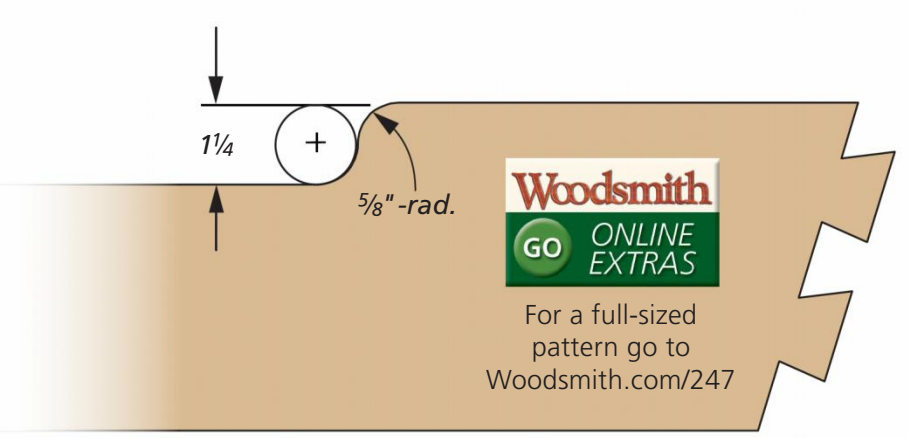

73° MITERS

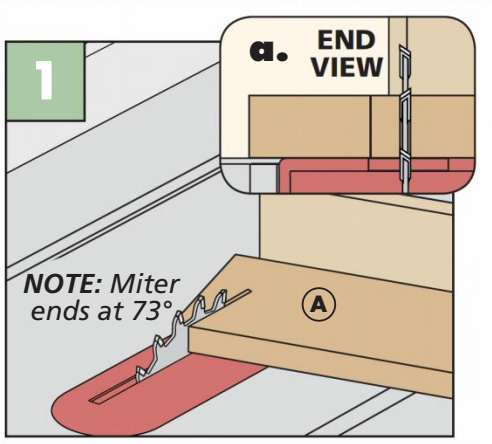

Miter Ends. Angle your miter gauge to miter both ends of the front and back pieces.

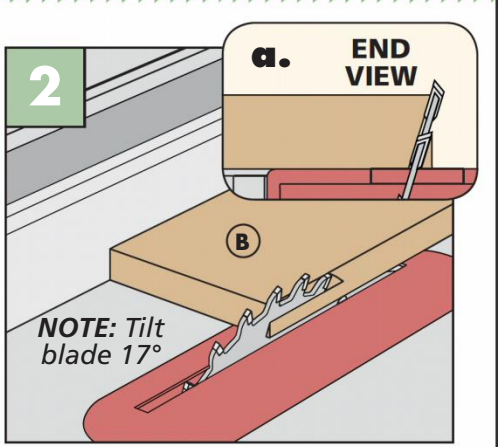

Bevel Sides. Tilt your saw blade 17° and bevel the edges of the sides to final width.

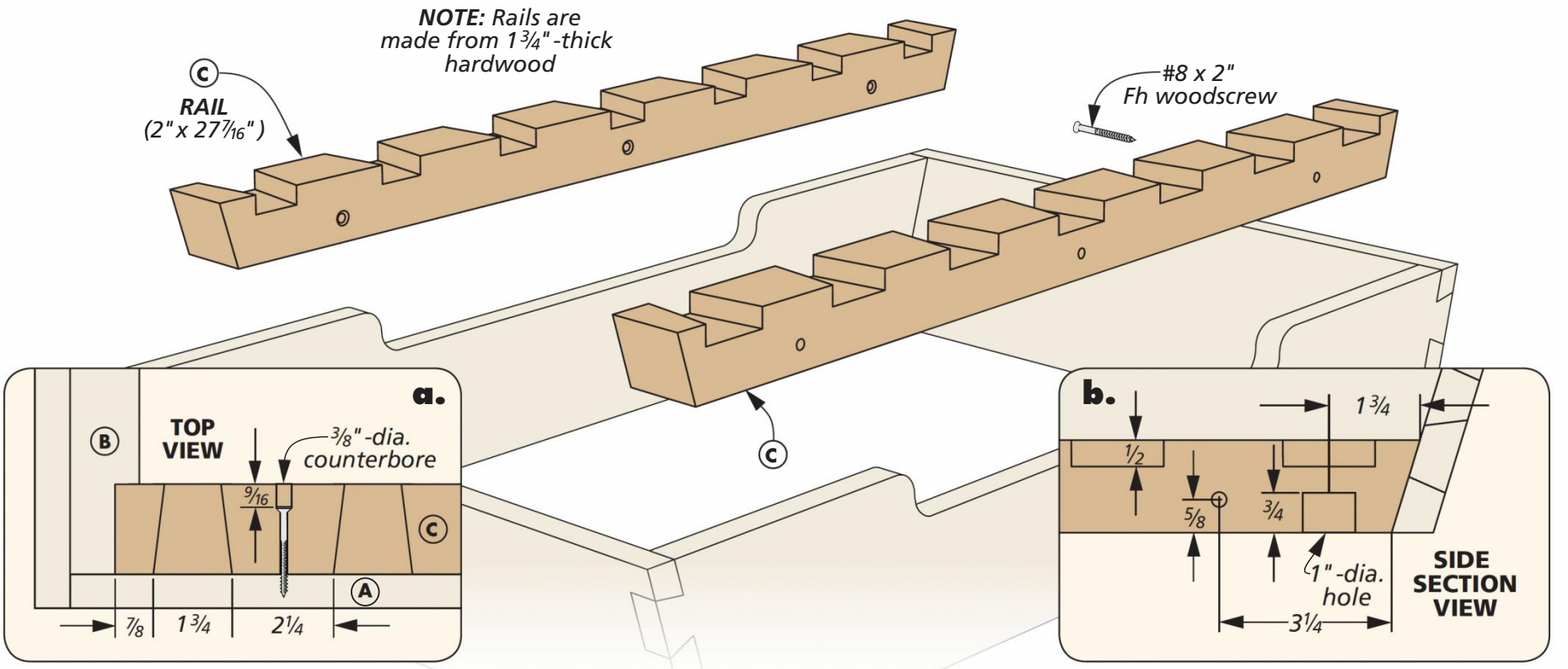

establish the radius, I cut away most of the remaining waste with a band saw. A straightedge and a router with flush-trim bit can be used to clean up the edge of the cutout.

At this point, you're ready for some assembly. The frame pieces are simply glued and clamped up, checking to make sure everything is square.

ADDING THE RAILS

Similar to a bed designed for a person, rails and slats are added to the frame of the pet bed to support the mattress. I made the rails first. These are simply two pieces of 1¾"-thick stock, with some dovetail slots to hold the slats that you'll make later. The drawing above shows you what I'm talking about.

Start off by cutting the rail blanks to size. The ends of the rails are mitered at 73° to fit in the frame. Once this is done, you can lay out the spacing of the dovetail slots as shown in detail 'a' above.

To create the dovetail slots, I turned to my router and a shop-made jig. As shown in the box below, the jig is nothing more than a couple of guides screwed to a pair of cleats. Clamping both rails together as you rout the slots with a pattern bit ensures that they will line up.

The last step before screwing the rails to the inside of front and back is to drill a shallow hole at each end of the rails, as shown in detail 'b.' These will be for the feet that you'll add later.

ROUTING DOVETAILS IN THE RAILS

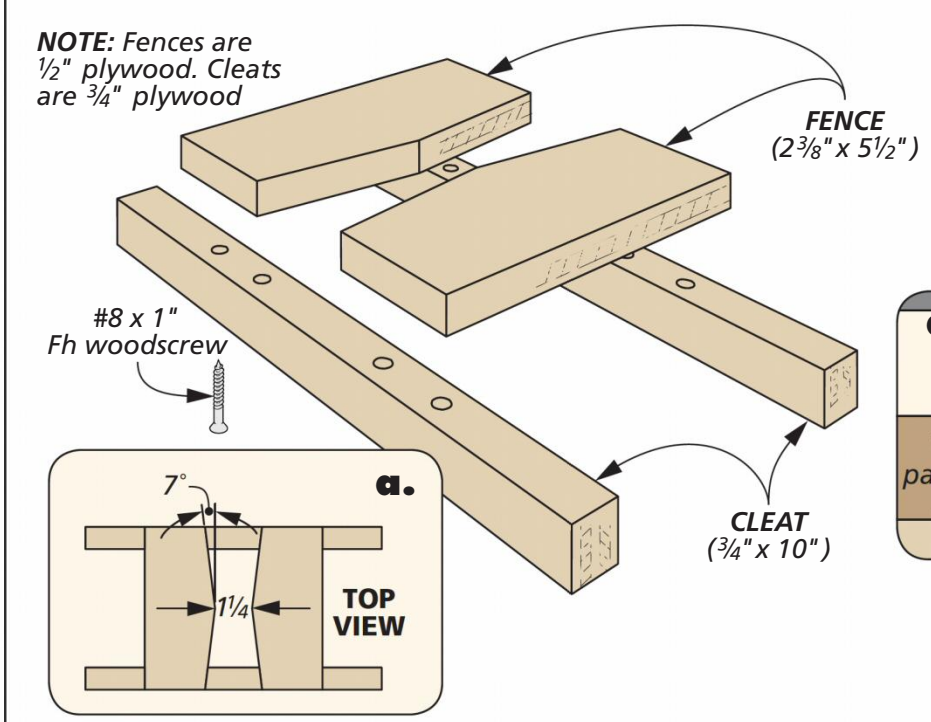

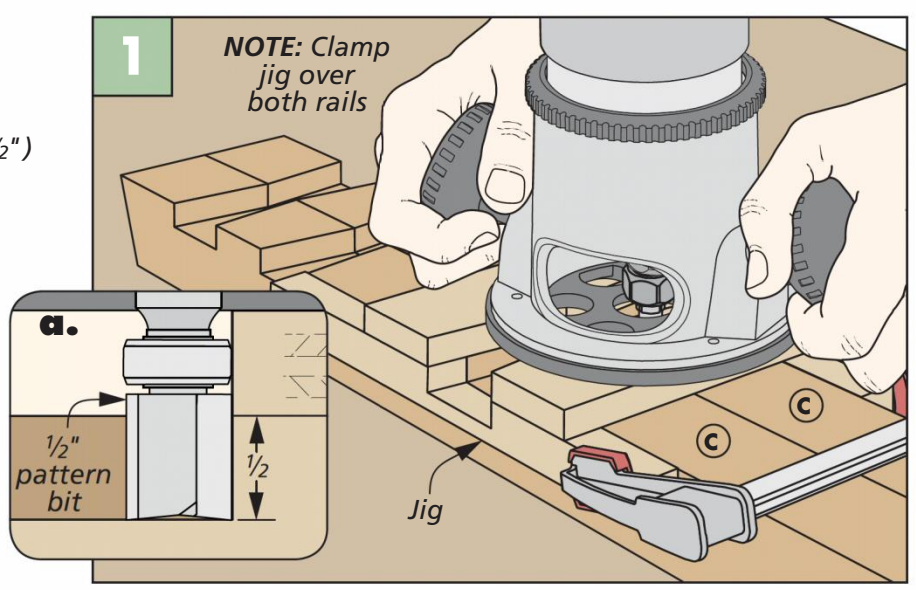

Rout Dovetail Sockets. Clamp both rails together to rout out the dovetail sockets, using the jig shown at left along with a hand-held router and a pattern bit.

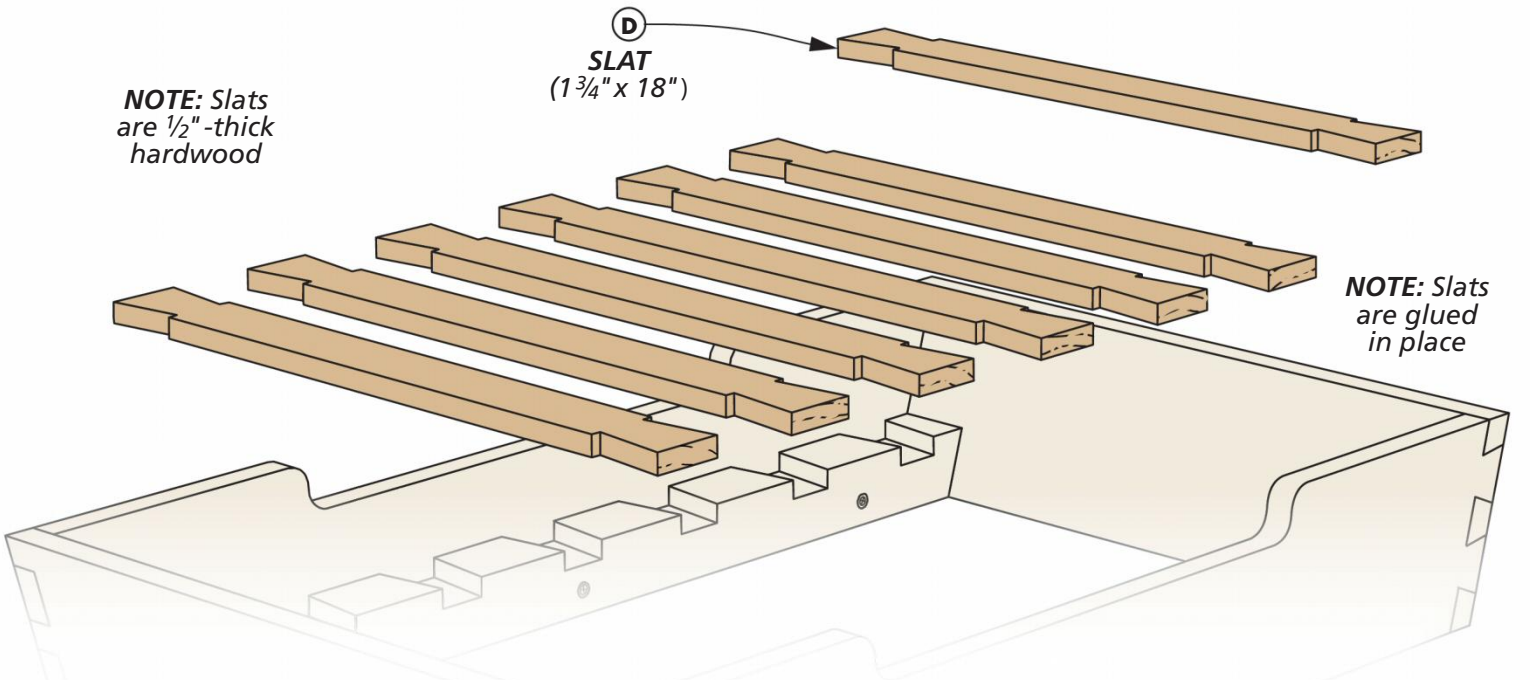

Adding the **SLATS**

At this point, the bulk of the work involved in building the bed is done. All that remains is to add a row of slats, some feet, and finally, a mattress.

SLATS. Compared to the rails, making the slats is a simple process. Start by cutting seven blanks to size from ½"-thick stock. The dimensions are shown in the main drawing above.

To create the dovetails on the ends of the slats, I turned to my table saw. Although you could do this with a band saw or even a hand saw, using stops on the table saw will ensure precise, identical cuts. And here's where using a jig to rout the dovetail sockets in the previous step really pays off. You should be able to cut all the dovetails using the same setups without having to custom fit each joint.

SHOULDERS. I started by making the shoulder cuts for the dovetails, as shown in Figure 1 below. I used my rip fence as a stop to locate the shoulder cut. The key here is to avoid cutting too deep into the corner of the shoulder by setting the blade a hair lower than the final shoulder depth.

DOVETAIL CUTS. After making all the shoulder cuts on the ends of the stretchers, you're ready to make the angled cuts. For these, I tilted my saw blade 7°. Using a tall auxiliary fence and stop block on my miter gauge, I was able to make these cuts in short order, as shown in Figure 2.

Because the two intersecting cuts meet at an angle, you'll need to clean out any waste in the corners of the dovetails with a chisel. Once that's done, you're ready to glue the slats into place. If you have a pin nailer, driving a pin through each joint will hold the pieces together while the glue dries.

DOVETAILED SLATS

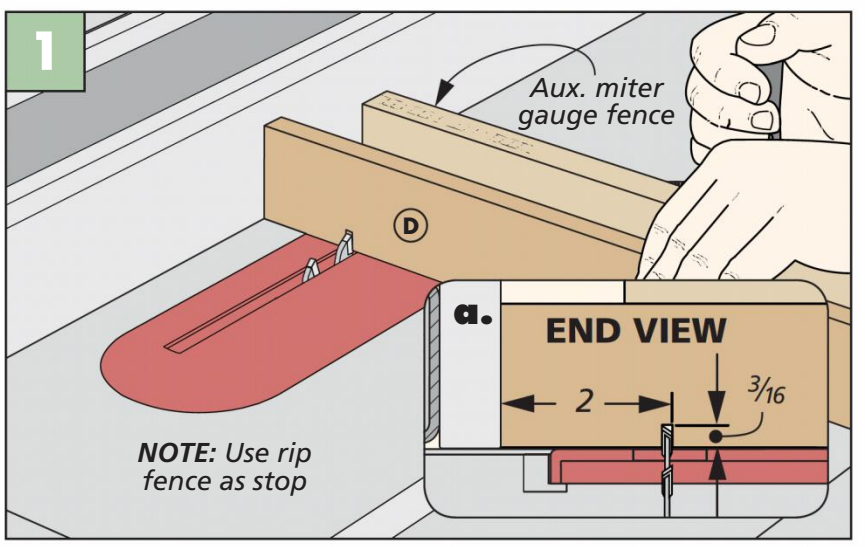

Cut Shoulders. To avoid cutting the shoulders too deep, set your blade for a shallow (3/16") cut when establishing the shoulders. The cut in the next step will remove the waste.

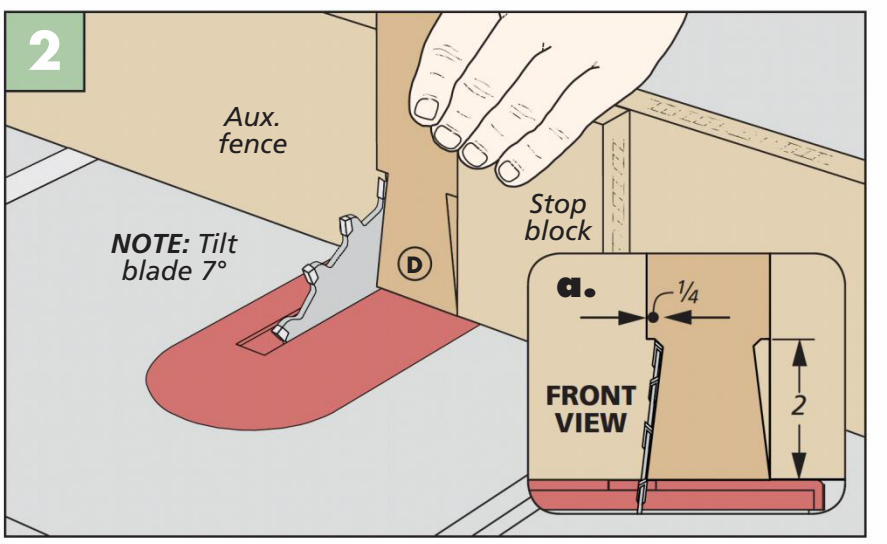

Angled Cuts. Tilt the saw blade to 7° to make the angled cuts. Again, set your blade slightly lower than the required cut and clean up any waste in the corners with a chisel.

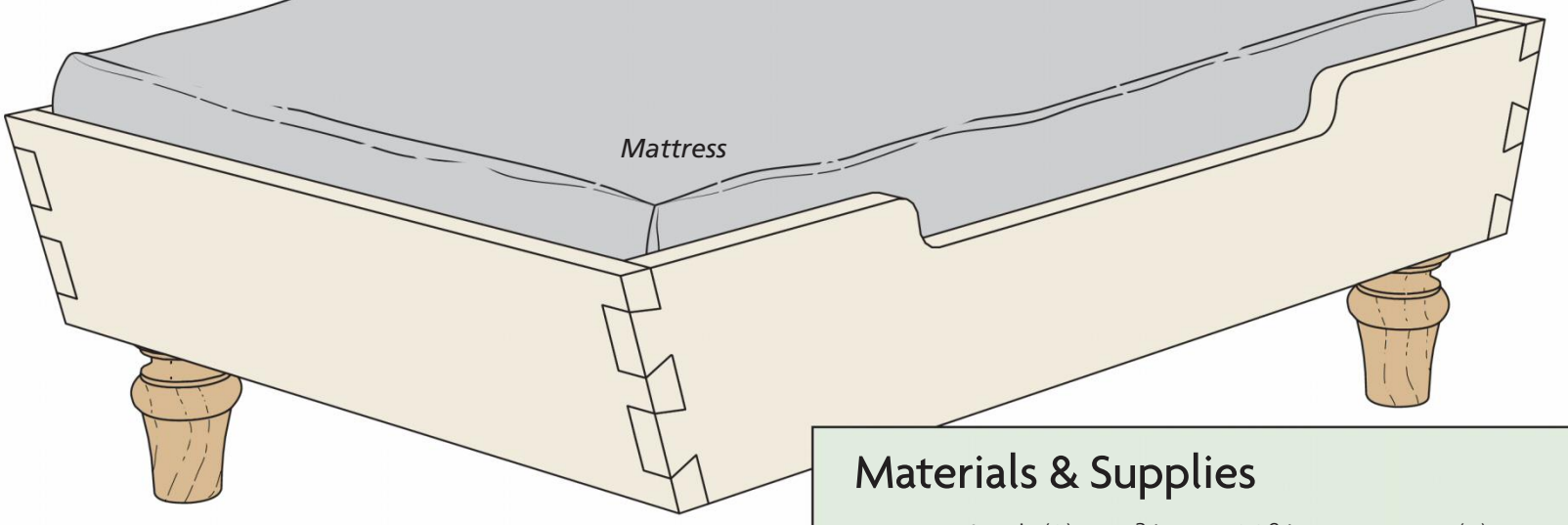

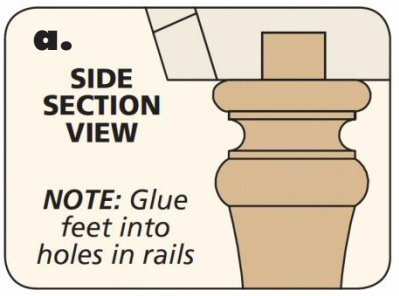

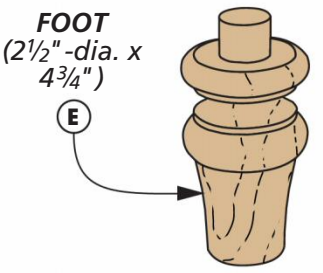

Materials & Supplies

A	Front/Back (2)	¾ x 5 - 30 9/16	E	Feet (4)	2½-dia. x 4¾
B	Sides (2)	¾ x 6 rgh. - 19½	•	(6) #8 x 2" Fh Woodscrews	
C	Rails (2)	1¾ x 2 - 27 7/16	•	(1) 18" x 24" Pet Bed Mattress	
D	Slats (7)	½ x 1¾ - 18			

¾" x 6½" - 60" Walnut (Two boards @ 2.7 Bd. Ft each)

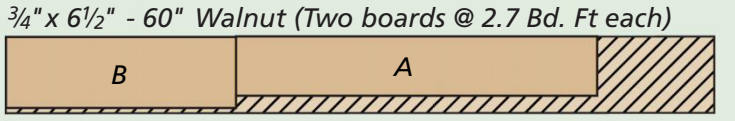

1¾" x 2 ½" - 60" Hard Maple (2.1 Bd. Ft.)

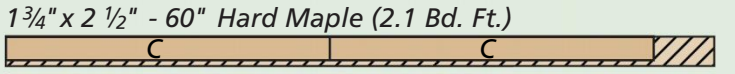

½" x 4½" - 84" Hard Maple (2.6 Sq. Ft.)

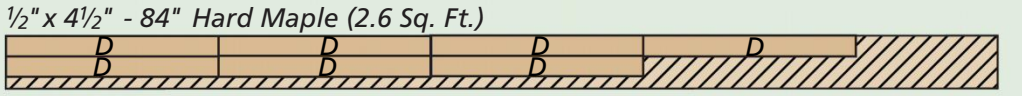

ALSO NEEDED: *3" x 3" - 24" Maple turning blank*

ADD SOME TURNED FEET

The finishing touch on this dog bed is a set of turned feet, like those shown above. I made mine out of a 3"-square maple turning blank. (If you don't own a lathe, you can purchase suitable turned feet.)

To make the feet, start by cutting the blanks to rough length. Then chuck the first blank up between centers in the lathe and turn it down to a 2½"-dia. cylinder, as you see in Fig. 1 below. I used a combination of gouges and scrapers to turn the profile.

Although all four feet don't have to be perfectly identical, I find that it helps to make a template when turning multiple parts. You can use the full-size pattern at right to create a hardboard template to help check your progress as you turn the profile.

When it came to sizing the tenon on the end of the foot, I made a pair of gauge blocks by clamping two scraps of wood together edge to edge and then drilling a ¾"-dia. hole along the jointline (Fig. 2)

After gluing the feet into the bed and applying an oil finish, you can add a suitable pet bed mattress (refer to Sources on page 66). Now all that remains is to set the bed up in an out-of-the-way spot where your pet will appreciate it. W

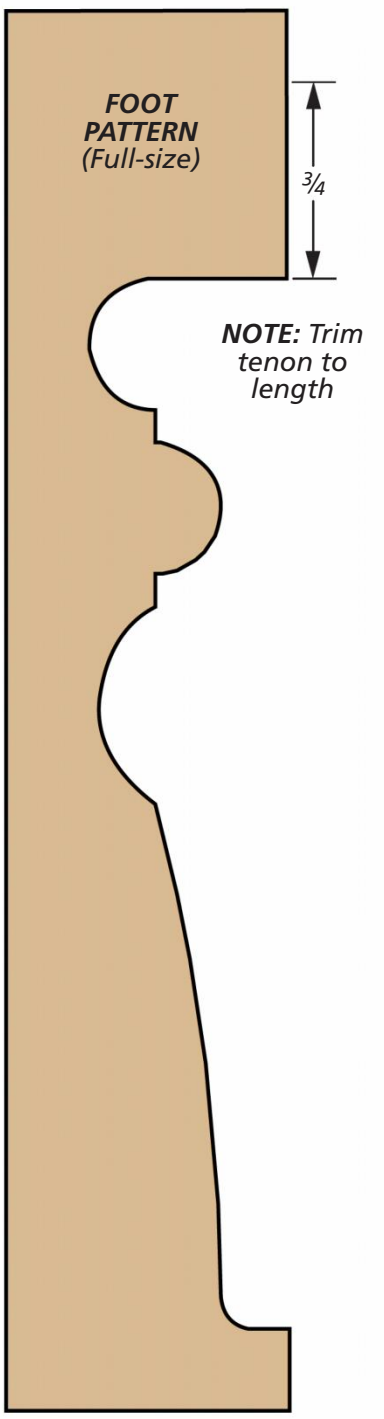

TURNING THE FEET

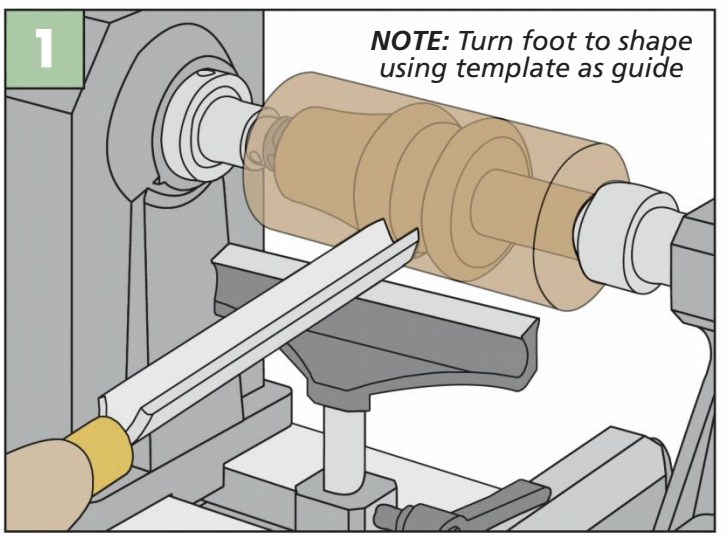

Turn the Feet. Use a roughing gouge to turn the blank round. Then turn the profile, using the pattern at right to gauge your progress.

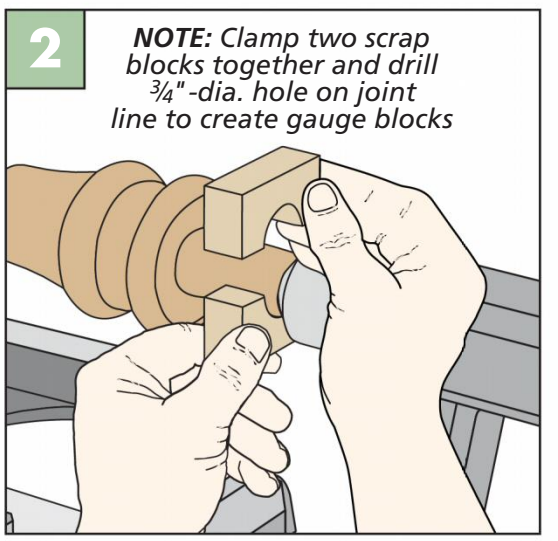

Size the Tenon. A pair of blocks with a 1"-dia. hole can be used to gauge the size of the tenon.

Written by: Phil Huber; Project Design: Ted Kralicek

Multi-Function Shavehorse

No, this isn't a woodworking rowing machine. This traditional device helps you get the most from hand tools.

▲ A shop-made wood clamp screw controls an adjustable jaw that makes it easier to work with different-sized workpieces. An article on page 54 shows you how to cut threads in wood.

▼ The shavehorse doubles as a sawbench for other hand tool operations like using a hand saw. A V-notch supports workpieces for ripping. Bench dog holes work with hold-downs for securing project parts.

There's a branch of the woodworking family tree that begins, well, with a tree. Log sections are split and shaped into rough blanks while the wood still contains a good amount of moisture. Working "green wood" with hand tools is easier than hard, dried wood. Green woodworkers shape the parts into chairs, stools, spoons, bowls, and more.

Working with parts that aren't flat, straight, and square requires a different mindset and employs some tools you may not be familiar with. One of those is a shavehorse. It's equal parts workbench, vise, and shop chair all rolled into one. And it's used to hold odd-shaped workpieces while you work them.

To secure a workpiece, press against the foot pedal. The upper jaw clamps down on the piece locking it in place. Repositioning the part only requires you to release the pressure from your feet. This arrangement works well with the two tools most often associated with shavehorses: a drawknife and a spokeshave. The pulling stroke of the tool works in concert with the pushing effort from your feet. The harder you press, the stronger the vise action. It's very efficient and fun to use.

The main difference between this and other shavehorse designs is the addition of the adjustable vise screw on top. This accommodates different sizes of workpieces with a few turns of the handle. The seat also serves as a sawhorse and worksurface.

Illustrations: Dirk Ver Steeg

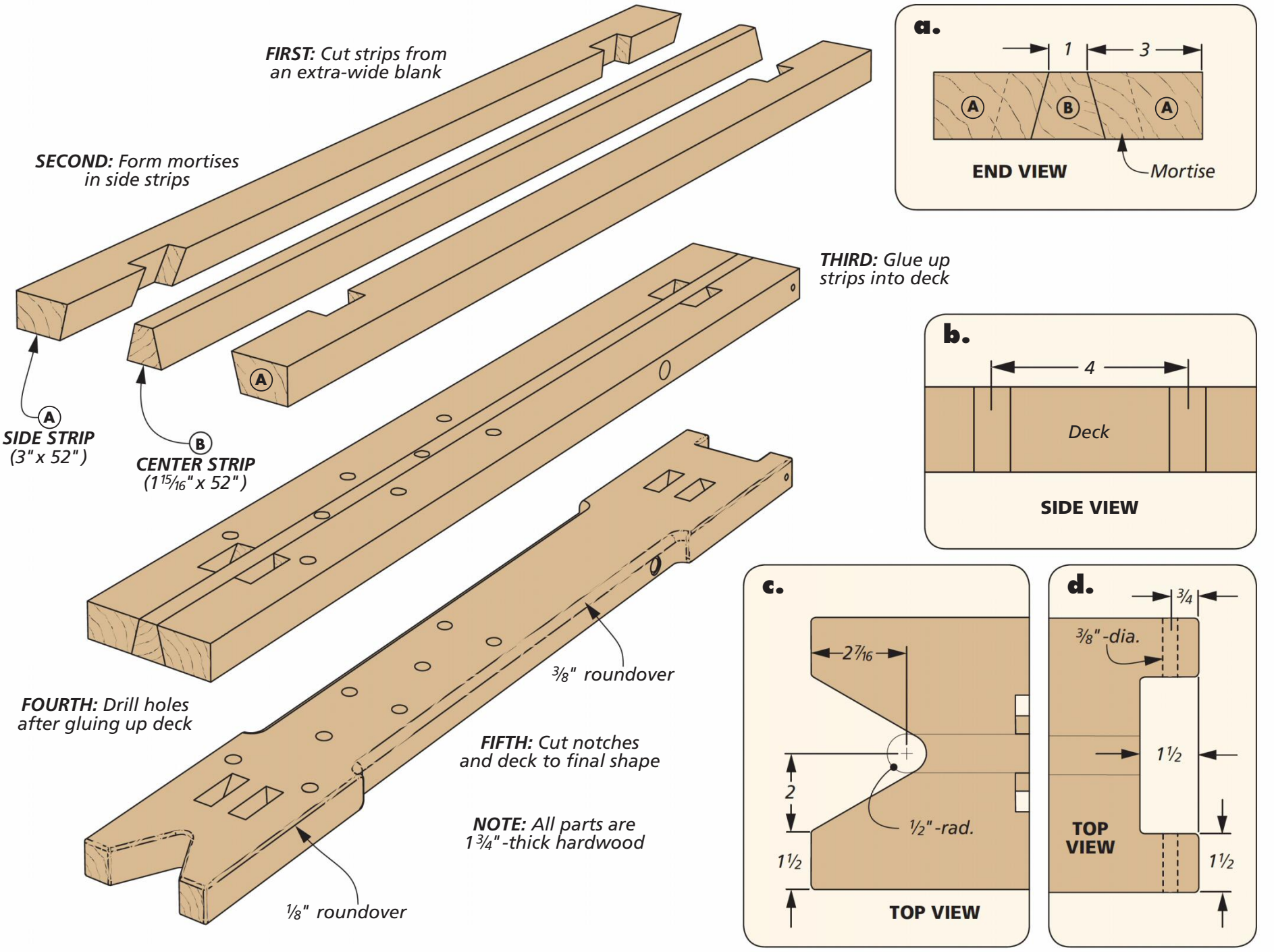

Multipurpose DECK

A shavehorse leans more heavy toward hard-working practicality than appearance and presentation. So I made this one out of poplar. It's easy to work, strong enough, and low cost. The starting point is the long deck that serves as the seat, work-surface, and pivot point for the built-in clamp.

While it ends up as a single piece, the deck starts as three narrow strips (drawing above). The pieces are beveled on the mating edges, as you can see in Figure 1 on the next page.

MAKING MORTISES. The reason for this is to simplify forming the splayed and raked mortises for the legs. The beveled edges of the center strip creates one angled side of the mortise. The other side is made using a dado blade with an angled miter gauge, as illustrated in Figure 2.

I want to pause and point out that since the mortises are raked and splayed, you'll be creating mirror image pairs of mortises in the side strips. For the opposite pair, you need to rotate the miter gauge in the opposite direction.

Completing the mortises allows you to glue the deck into a single unit. Figure 3 shows how to keep it flat.

DRILLING HOLES. Don't get carried away with cutting the profile of the deck just yet. There are two holes drilled through the edge of the deck that are better drilled while the piece is still square. These are used to attach the foot pedal and clamp mechanism and the front edge of the table (detail 'd' above).

The pivot hole has a shallow counterbore on each side (once the deck is cut to final shape) to house a flanged bearing. I chose to drill these at the drill press, as shown in Figure 4.

Since the deck is so wide, you'll need to drill from each edge. Clamping a fence on the drill press table helps align the holes. To drill the second part of the hole, all you need to do is flip the piece around, keeping the same face against the fence.

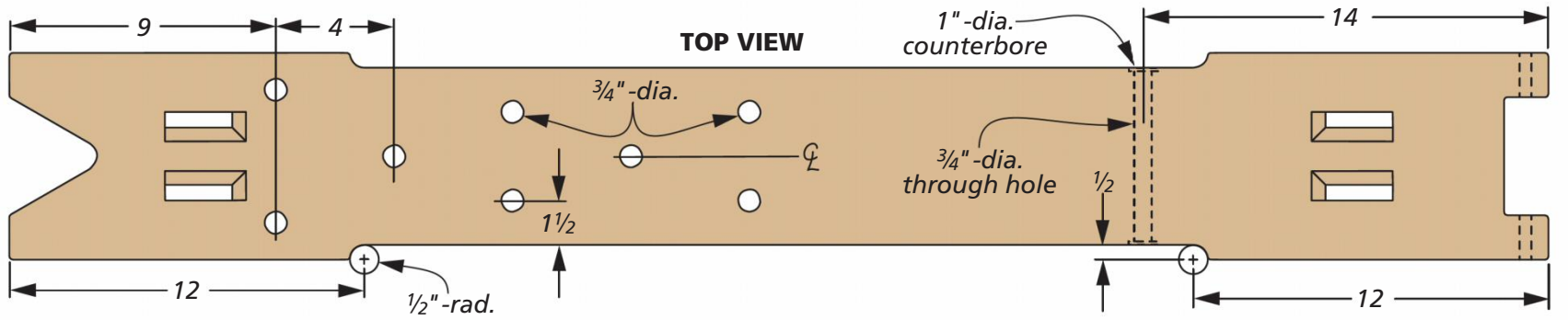

TWO NOTCHES. Each end of the deck is notched, but for different reasons. The front is notched to accept the front leg of the table you'll add later, as in detail 'd' on the previous page. In keeping with the hand tool nature of the project, you can cut the sides of the notch with a hand saw. Cut along the baseline with a coping saw and cleanup with a chisel and file. A jig saw would complete the whole job just as well (I won't judge).

The notch on the opposite end of the deck takes a different shape. It's V-shaped (as in detail 'c' on the previous page) to support a board during rip cuts with a hand saw. For this, I drilled out the root of the V then cut the sides with a hand saw.

RELIEVED SIDES. The long edges of the deck are cut narrower to make it more comfortable to sit on the shavehorse, as shown in the drawing above. Once the sides are cut out, you can round over the edges.

BENCH DOG HOLES. The remaining deck detail is to drill a series of bench dog holes. These allow you to use dogs and hold-downs to secure a workpiece for sawing, drilling, and other shaping tasks.

MAKING THE DECK

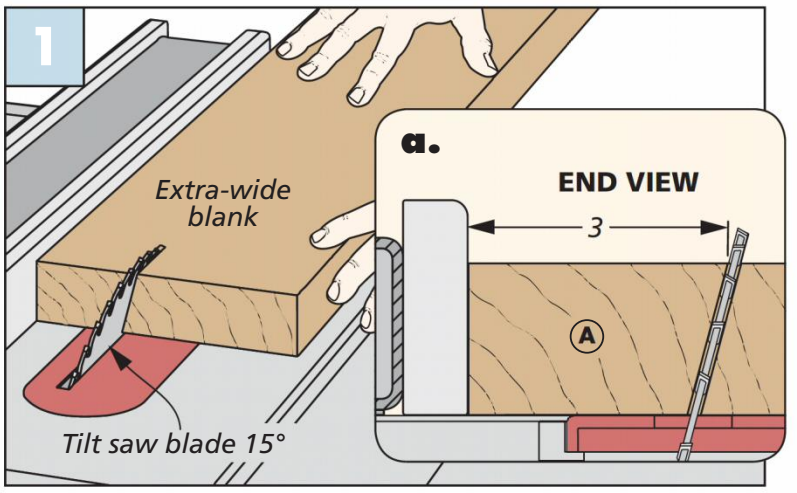

Bevel Ripping. Starting with an extra-wide blank, bevel rip the deck into three narrow strips to help create the raked, splayed mortises.

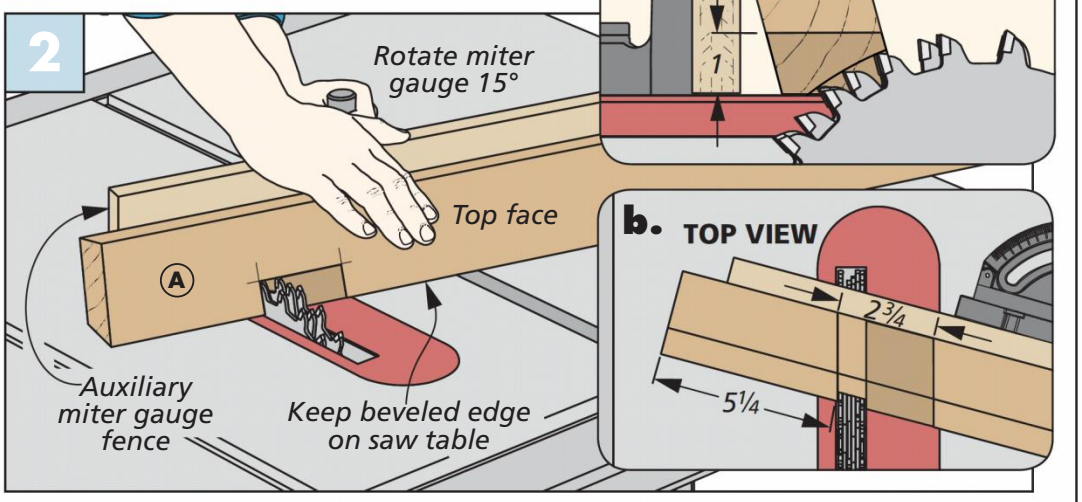

Mortises at the Table Saw. Rotate the miter gauge to create the splay in the mortise. Be sure to keep the beveled edge of the strip flat on the saw table (detail 'a'). Make the mortise in several passes.

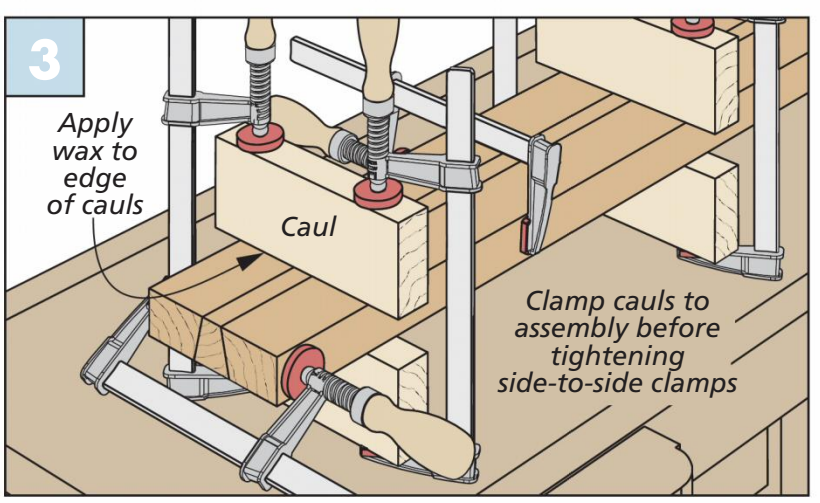

Glue It Up Flat. The beveled edges can cause the strip to slip during glueup. Clamping cauls above and below the joint lines holds the parts in alignment.

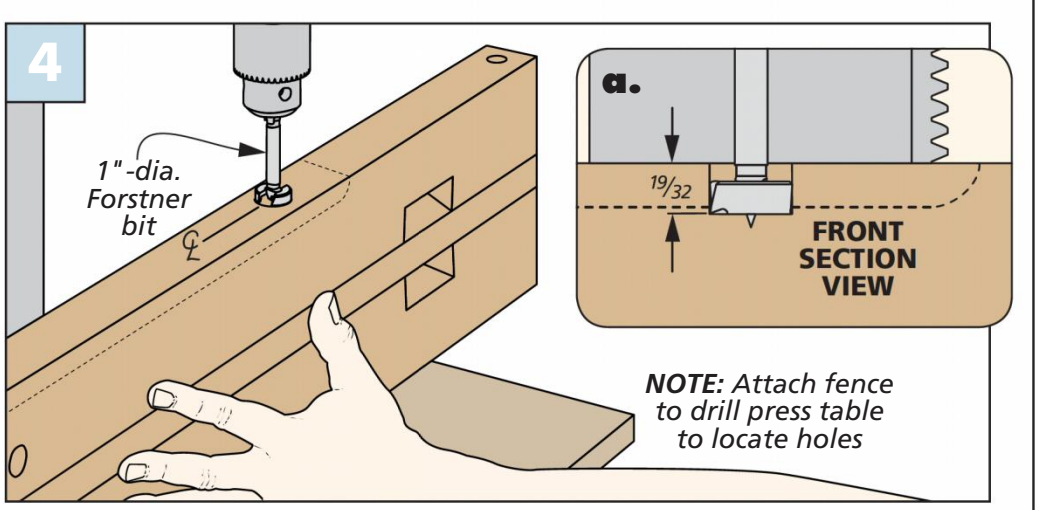

Drilling Holes. Start with a Forstner bit to create the counterbore (detail 'a'). Then switch to a brad point bit to drill as deep as you can. Flip the workpiece and repeat the steps on the other edge.

Raked & splayed LEGS

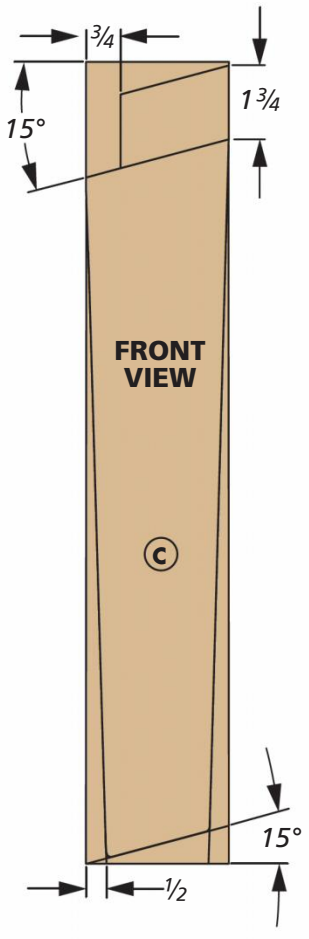

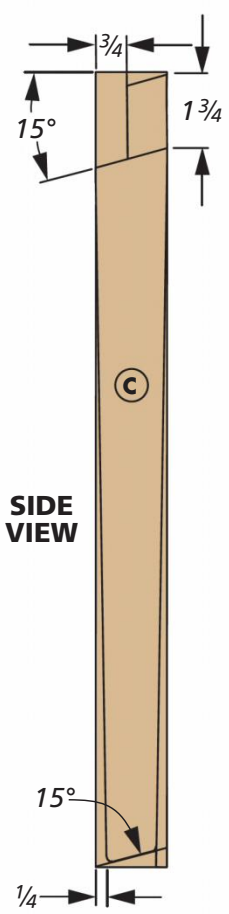

For maximum stability, the legs of the shavehorse angle in two directions called rake and splay. Rake refers to the side to side lean, while splay describes the end-to-end tilt (drawing at right).

The mortises you've already completed in the deck give you a good start. The task at hand is to make the legs to fit into those mortises.

Before jumping in though, I want to remind you that the legs are made in mirror-image pairs. So label your parts clearly.

The first step is to cut the legs to final length. This means making a compound angle cut on each end, as shown in the left drawings. There's more shaping to be done, but for now, it's time to tackle the tenons on the top.

THREE-STEP TENONS. When the tenon angles in two directions, forming them follows a different route from a straight tenon.

The first step is cutting the wide shoulder. I used a single blade for this step, as shown below in Figure 1. Here, both the blade and the miter gauge are angled to match the mortise. It's a good idea to locate this cut so that the tenon is a bit longer than the thickness of the deck. This avoids having a sunken joint. (You can trim the tenons flush after assembly.)

For the second step, swap out the single blade for a wide dado blade. In several passes, remove the rest of the waste, working out to the end of the tenon. This is shown in Figure 2.

At this point, you should be able to test the fit of the tenon to the mortise by slipping the corner of the tenon into the mortise.

The final step is to cut the tenon to width. You can use the same method as cutting the wide face, but I found that marking the width and cutting with a hand saw worked just as well.

TAPERED LEGS. When the legs fit the mortises snugly, they're ready for some shaping. The left drawings show a gradual taper along both the width and thickness of the leg. This is done to lighten the look of the leg. There are several ways to approach this detail. The method I used

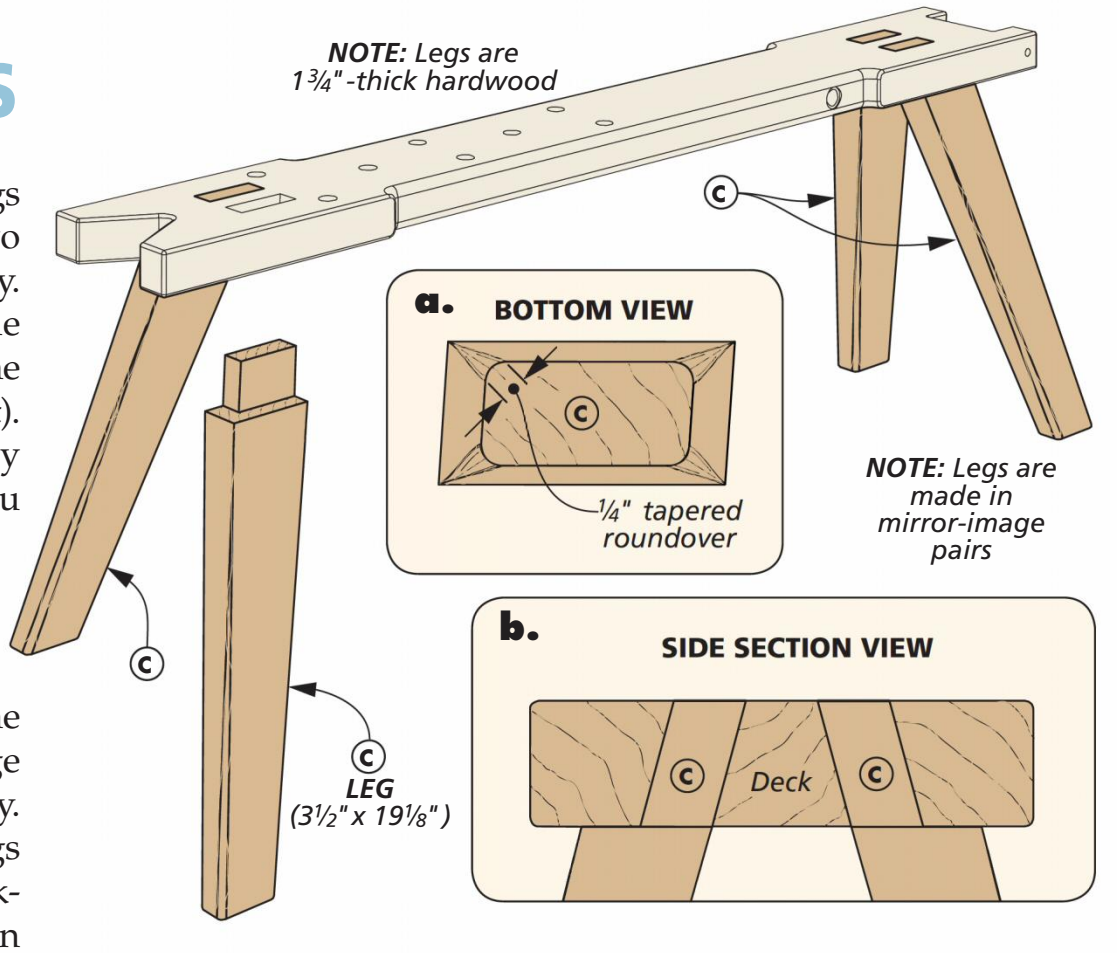

ANGLED & OFFSET TENONS

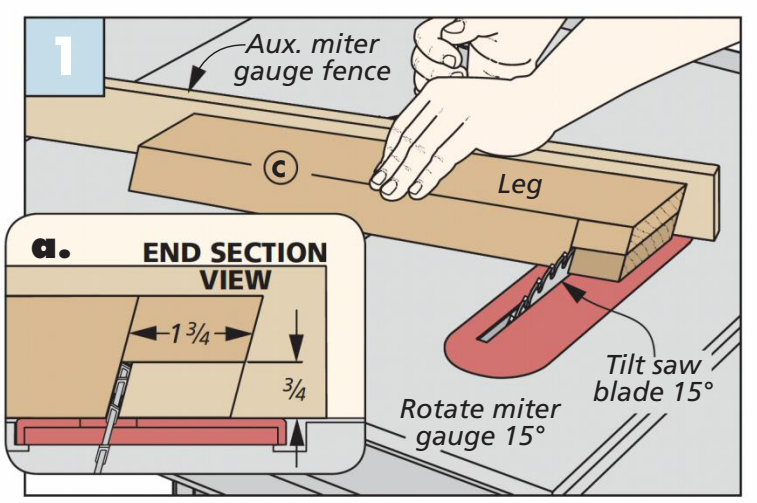

Tenon Shoulder. Start with a single blade to define the shoulder on the wide face of the leg. Rotate the miter gauge and tilt the saw blade.

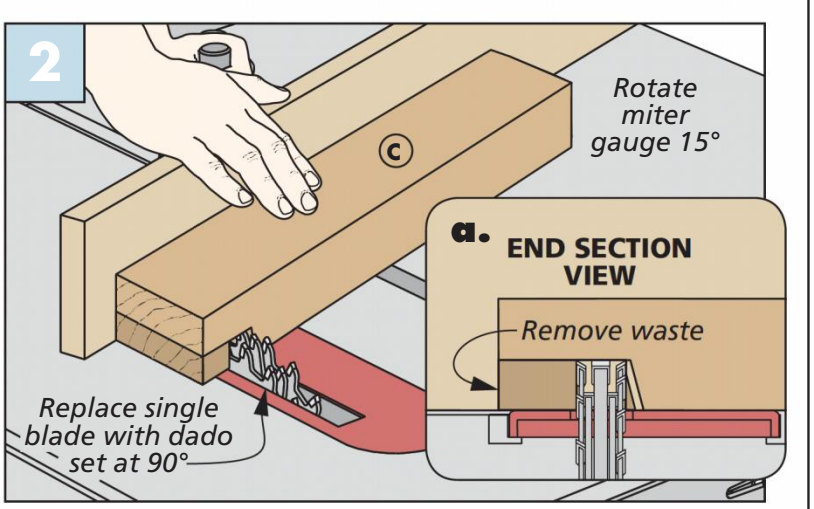

Tenon Cheek. Square up the blade and switch to a dado stack to remove the remaining waste and form the wide cheek of the tenon.

was to form the taper with a hand plane. I started with coarse cuts, then smoothed the faces and edges with lighter passes with a fine blade setting.

Rounding the long edges and end of the leg softens sharp corners and matches the deck. Then glue the legs into the deck.

WORKTABLE

Moving up from the legs, the next part of the shavehorse to make is the table, as shown in the right drawing. This assembly creates a worksurface for the workpiece to rest on while it's being shaped.

The table consists of three parts: a top and two supports. The supports are different lengths to hold the table at a comfortable working angle. The shorter front support has a hole drilled through it to attach to the deck with a bolt. This forms a pivot so that you can raise the back support up with a block to shape thinner stock. The back support is simply cut to size and the bottom rounded slightly.

NOTCHED. The top is wider than the supports. To join the parts, a notch is formed on the top to accept the supports, similar to a mortise and tenon (detail 'b'). Cut the notches using a dado blade while holding the top on end, as in Figure 1 at right.

The aim here is for a snug fit. Too tight could split the top, so sneak up on the width of the notch. In my book, you should have to press the pieces together firmly with your hands.

GROOVED. The three parts can be glued together so the upper surface is flat. Once the clamps come off, head to the router table and rout a V-shaped groove down the length of the assembly (detail 'c' and Figure 2). This detail allows you to hold square parts corner to corner and also prevents round parts from shifting in the jaws.

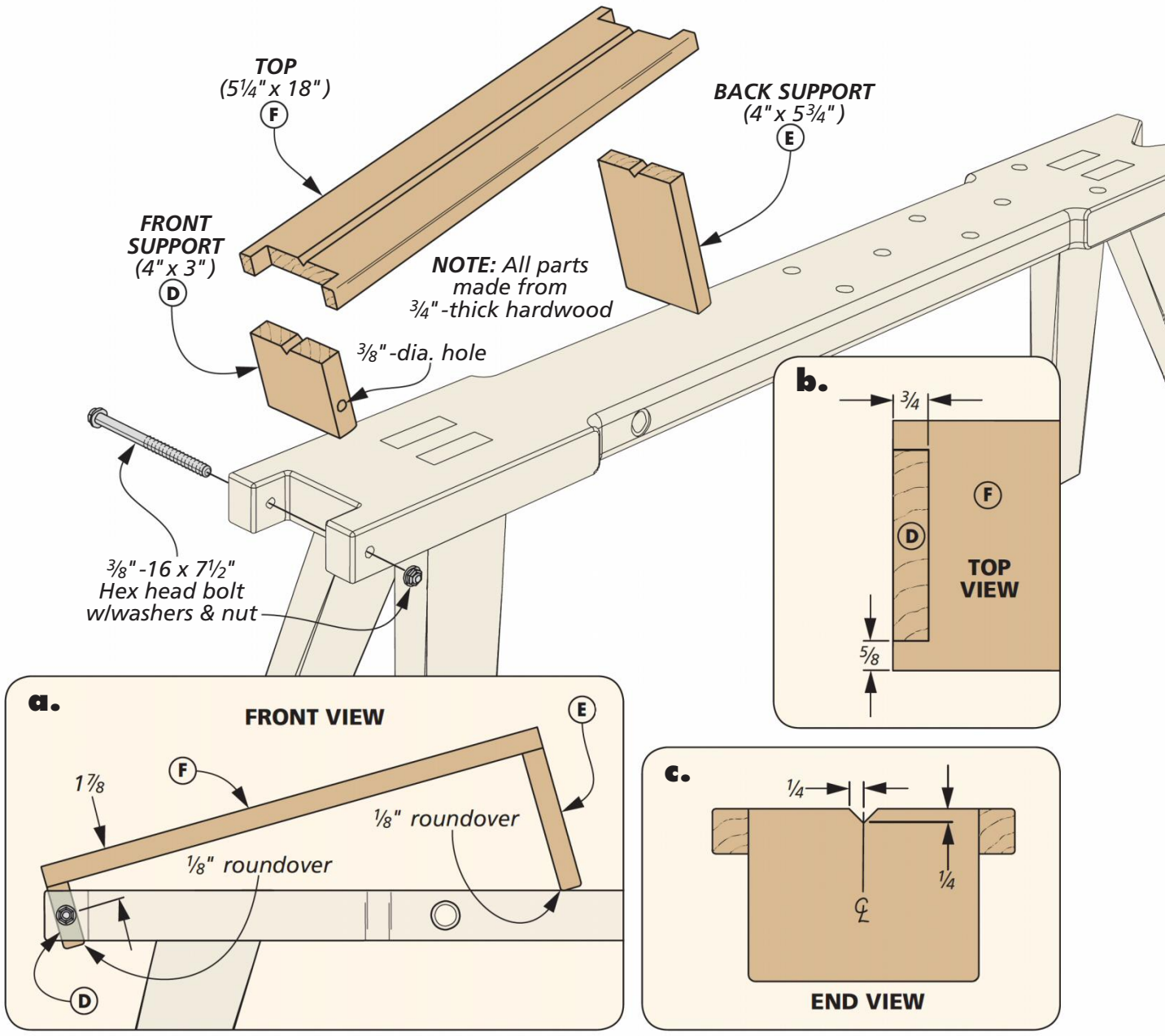

CUT NOTCHES & V-GROOVE

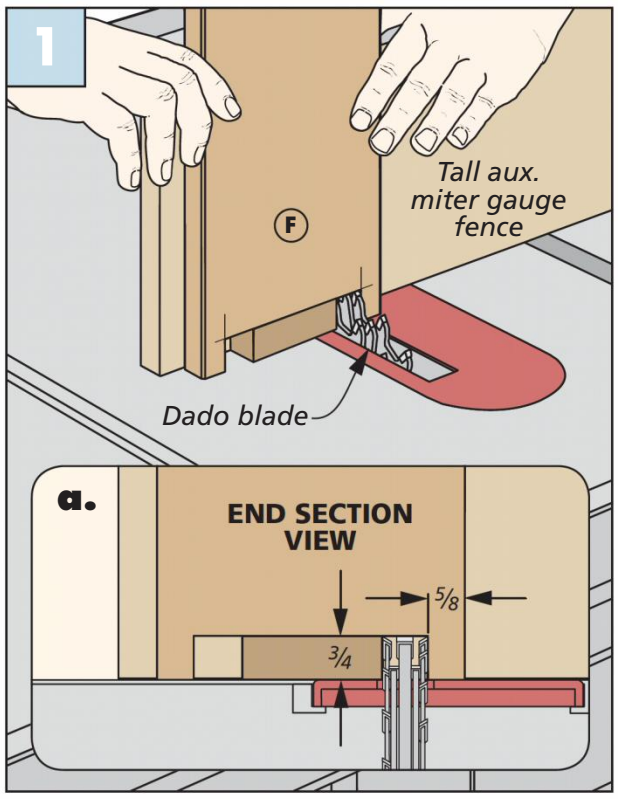

Making a Notch. A tall auxiliary miter gauge fence provides support for the top while cutting the wide notch.

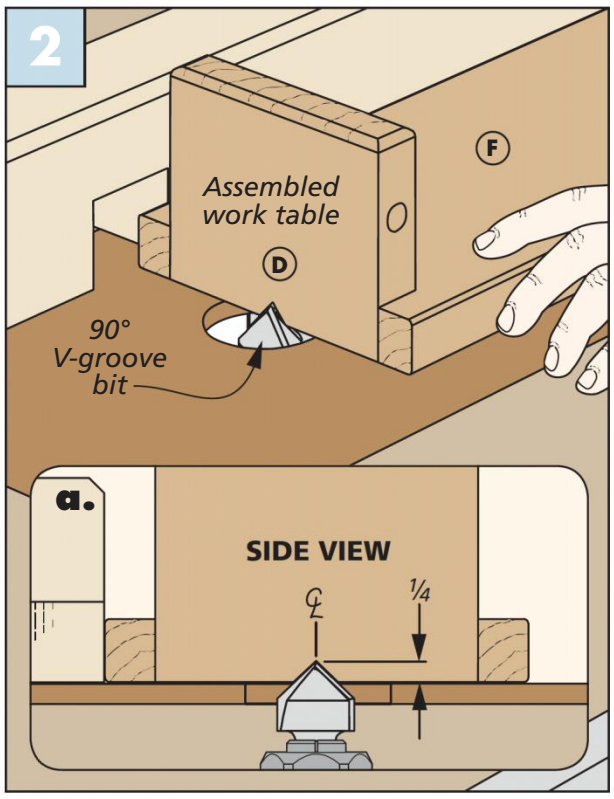

Routing a V-Groove. Take your time to center the bit on the width of the table before routing the groove.

An adjustable CLAMP

If you remember your simple machines, there are two here: the lever and the screw. A foot-operated lever presses a jaw against a workpiece resting on the table. The jaw's relative position can be adjusted with a wood screw. There are more pieces here than in the other sections of the construction, but it's still pretty straightforward.

A STRONG FRAME. In essence, you're making a stout frame to support the clamp jaw. It's outlined in the right drawing. A pair of long posts anchor two thick stretchers which together house the sliding jaw assembly.

The posts have through mortises in the upper half to hold the stretchers (left drawing and Figure 1 on the next page). A shallow groove runs between the mortises to accept a runner, as shown in details 'b' and 'c.' You can see the way to do this at the router table in Figure 2.

At the bottom, you need to cut a slot to hold the pedal. I found it was best to cut this at the band saw. There's also a counterbored hole that holds a flanged sleeve bearing just like the deck. A roundover softens all the edges and completes the post work.

STRETCHERS. The two stretchers have long tenons on the ends sized for a snug fit in the mortises (detail 'b'). The upper stretcher has a threaded hole for the wood clamp screw. A wood threading kit includes a tap and threadbox and is frankly fun to use. The article on page 54 walks you through the process step by step. The stretchers have roundovers routed on the edges and can then be glued to the posts.

ADJUSTABLE JAW. The sliding adjustable jaw is a unique construction. It's made in two halves and is designed to be assembled in place with screws.

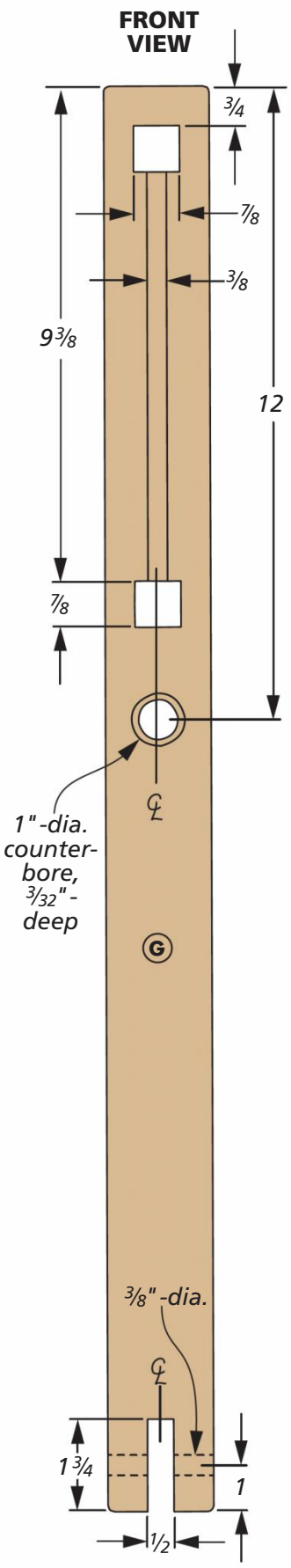

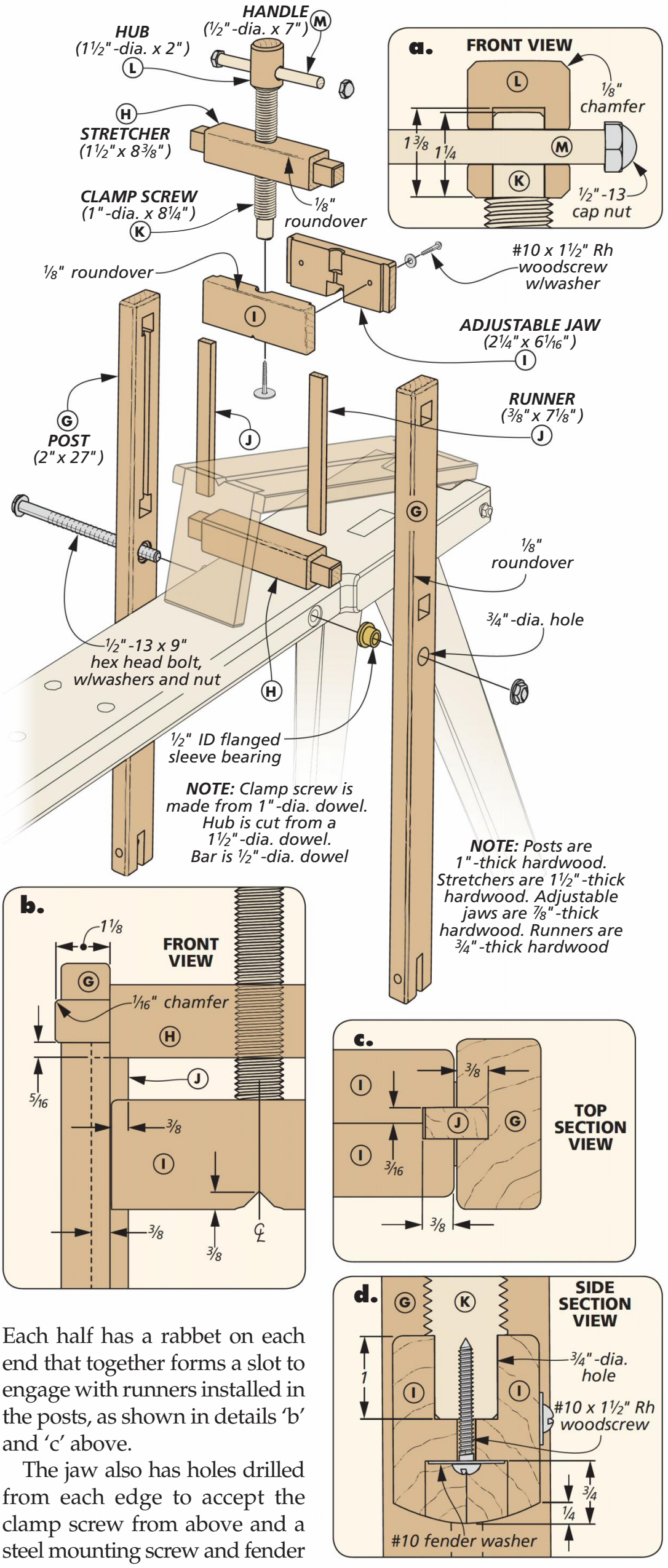

Each half has a rabbet on each end that together forms a slot to engage with runners installed in the posts, as shown in details 'b' and 'c' above.

The jaw also has holes drilled from each edge to accept the clamp screw from above and a steel mounting screw and fender

washer from below. To drill these, screw the halves together and drill the holes at the drill press.

The lower edge of the jaw is rounded to make a better clamping surface (detail 'd'). And a centered notch is cut to hold square parts firmly at an angle.

CLAMP SCREW. The clamp screw is made from a wood dowel that's threaded using the threadbox from the kit. (Refer to Sources on page 66.) The dowel has a tenon shaped on each end. I did this at the router table using a straight bit. The dowel is held in a V-block and rotated over the bit to form the tenon.

The clamp screw is capped with a hub cut from a larger dowel (detail 'a' on the previous page). Then drill a hole through the hub and screw to accept a dowel handle. The handle is secured with steel cap nuts twisted onto the ends.

The screw can be threaded into the upper stretcher and screwed into the jaw, as shown in detail 'd' on the previous page. This whole assembly can be installed on the deck using a large hex bolt, washers, and a nut.

FOOT PEDAL

The final part to make is the pedal that attaches to the bottom of the posts. This piece has a pair of dadoes cut across opposite faces to slide into the notches in the bottom of the posts (upper right drawing and detail 'a').

Before installing the pedal, shape a tapered roundover on the outer ends. This detail eases the edges of the pedal making it more comfortable to press against and prevents the edges from splintering over time.

The pedal is secured with bolts, washers, and nuts (no glue). This way, you can take it apart if necessary. Then you can have a seat, grab a piece of wood and drawknife and before you know it, end up with a chair. W

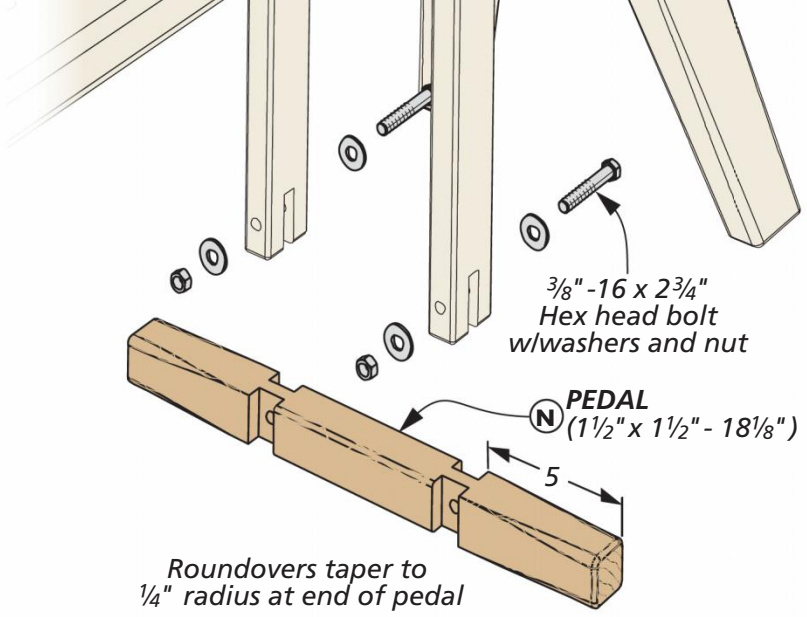

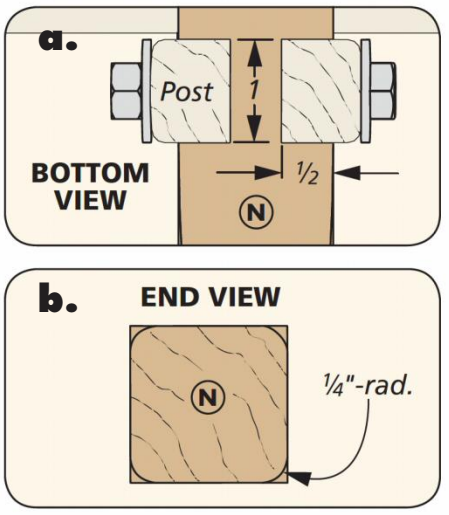

THROUGH MORTISE & GROOVE

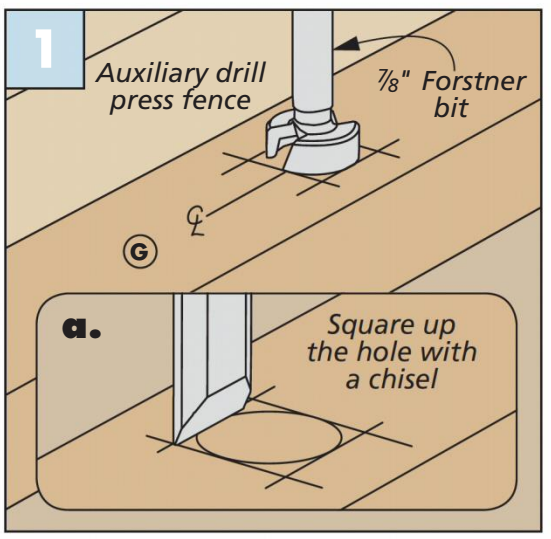

Through Mortise. A Forstner bit and chisel form a one-two punch to create accurate mortises.

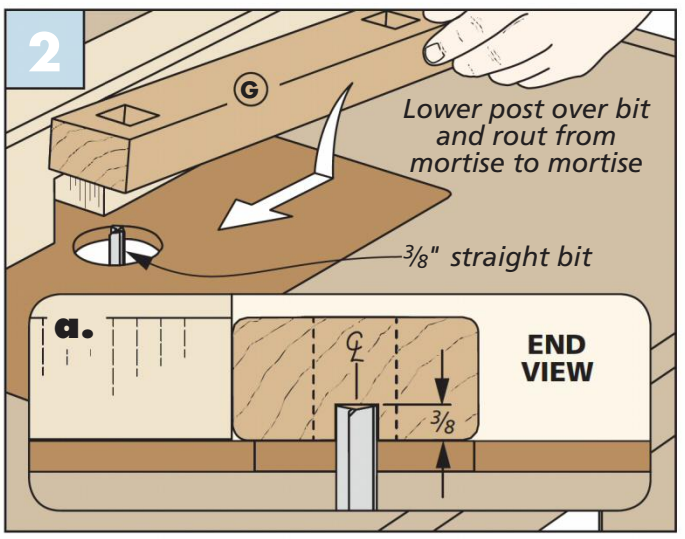

Stopped Groove. The router table is my tool of choice for cutting stopped grooves. Cut the groove in two passes.

Materials, Supplies & Cutting Diagram

A	Side Strips (2)	1 3/4 x 3 - 52
B	Center Strip (1)	1 3/4 x 1 15/16 - 52
C	Legs (4)	1 3/4 x 3 1/2 - 19 1/8
D	Front Support (1)	3/4 x 4 - 3
E	Back Support (1)	3/4 - 4 x 5 3/4
F	Top (1)	3/4 x 5 1/4 - 18
G	Posts (2)	1 x 2 - 27
H	Stretchers (2)	1 1/2 x 1 1/2 - 8 3/8
I	Adjustable Jaws (2)	7/8 x 2 1/4 - 6 1/16
J	Runners (2)	3/4 x 3/8 - 7 1/8
K	Clamp Screw (1)	1-dia. - 8 1/4
L	Hub (1)	1 1/2-dia. - 2
M	Handle (1)	1/2-dia. - 7
N	Pedal (1)	1 1/2 x 1 1/2 - 18 1/8

- (4) 1/2"I.D. x 3/4"O.D. - 1/2" Flanged Bearings
- (1) 3/8"-16 x 7 1/2" Hex bolts & Nuts
- (6) 3/8" Washers
- (3) #10 x 1 1/2" Rh Woodscrews
- (2) #10 Washers
- (1) #10 Fender Washer
- (1) 1/2"-13 x 9" Hex Bolt & Nut
- (2) 1/2" Washers
- (2) 3/8"-16 x 2 3/4" Hex Bolts & Nuts
- (2) 1/2"-13 Cap Nuts

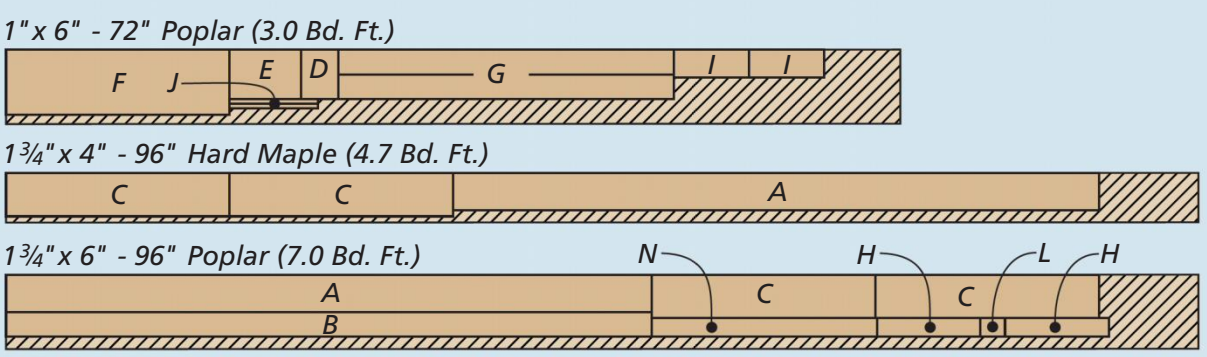

Floor Lamp

It will be easy to find your mid-century groove with this number hanging out in a room that requires a little more illumination.

The clean lines and sculpted look of this mellow lamp harkens back to an optimistic time. Fifteen pieces of wood and a dash of Scandinavian styling is the recipe for this project.

I chose mahogany for this lamp, because it plays well with the shade that you see in the photo. You'll make the shade, but it isn't as daunting as it might seem when you follow the steps that we highlight for you. We'll get to that later. For now, let's start with the legs.

LEGS. As you see in the main drawing on the next page, the three legs that define the shape of the lamp are each made up of two parts. The longer upright piece is tapered on the outer edge. The inside edge remains square to provide a consistent reference for the stretchers. The shorter foot is tapered on both edges. The two 1"-thick pieces are mitered and joined together with dowels. Making these parts starts with cutting the blanks to size. Set the foot blanks aside for the moment and focus on the uprights.

HOLES. The uprights have three holes drilled in the edges. These counterbored holes are for screws that thread

Written by: Erich Lage, Project Design; Dillon Baker

into inserts in the stretchers. At the drill press, start by drilling the counterbores, then finish up with the pilot holes.

MITERS. The miter joints that connect the uprights and feet are up next. The miter on the upright is easy enough, but the foot is different. The angle is created by the two tapers. There's a full-size pattern available at *Woodsmith.com/247* that you can use. Before tapering the foot, drill the dowel holes. Details 'a' and 'c' in the main drawing and the box below show this.

DOWEL HOLES. To drill the holes square with the ends of the blank, I used a self-centering doweling jig. As the box below shows, this is easy to do with the part clamped in a vise. Make sure the holes are deep enough so the dowels won't bottom out.

TAPER. A tapering jig will make short work of the long taper on the upright. As for the foot, you'll have to make a couple of passes to create its profile. Before gluing up the parts you have to dress the ends.

THE ENDS. There's a pair of ⅝" radii on the top of the leg (detail 'b'). One creates a decorative scallop, the other just rounds off the end. The bottom edges of the foot have ½" radius (detail 'd'). After gluing up the legs, ease the edges with your router. You can now turn your attention to making the stretchers that bring the legs together.

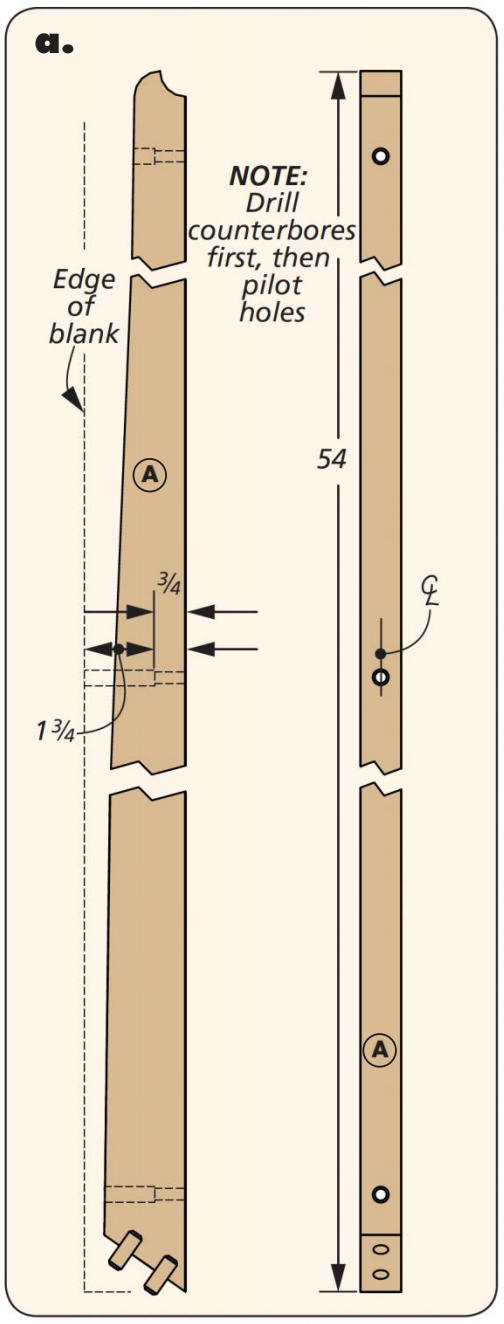

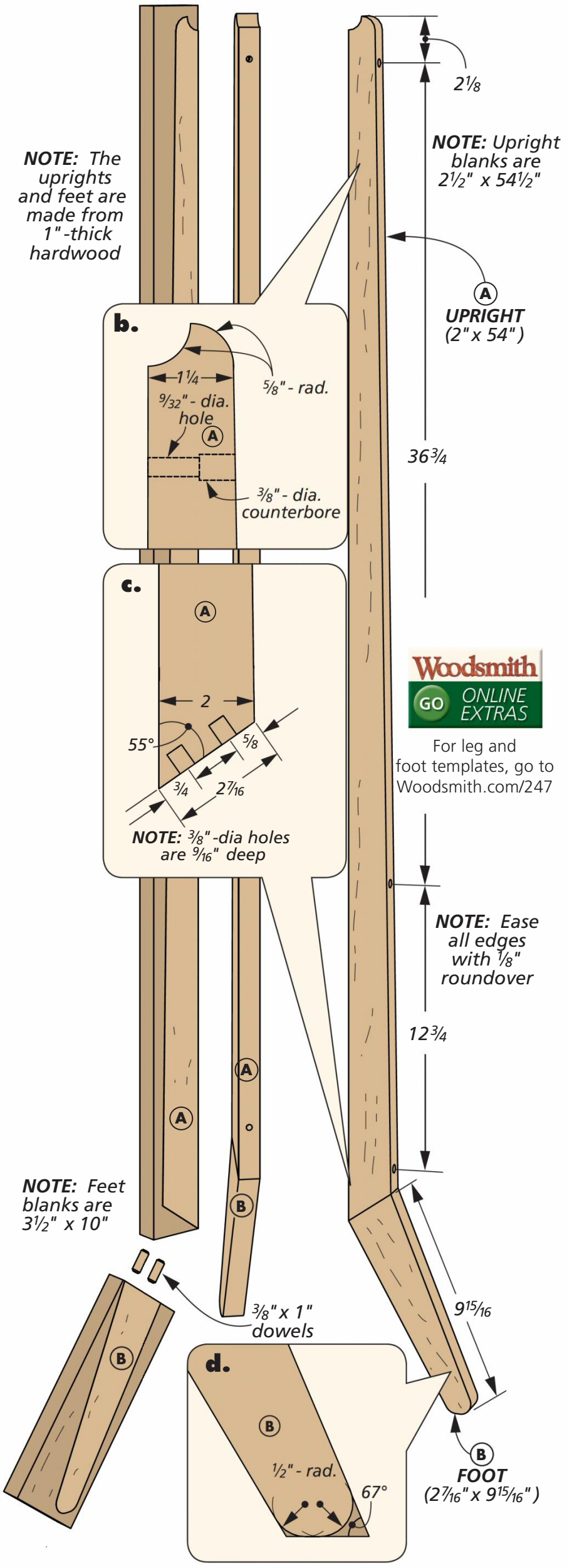

DRILLING FOR DOWELS

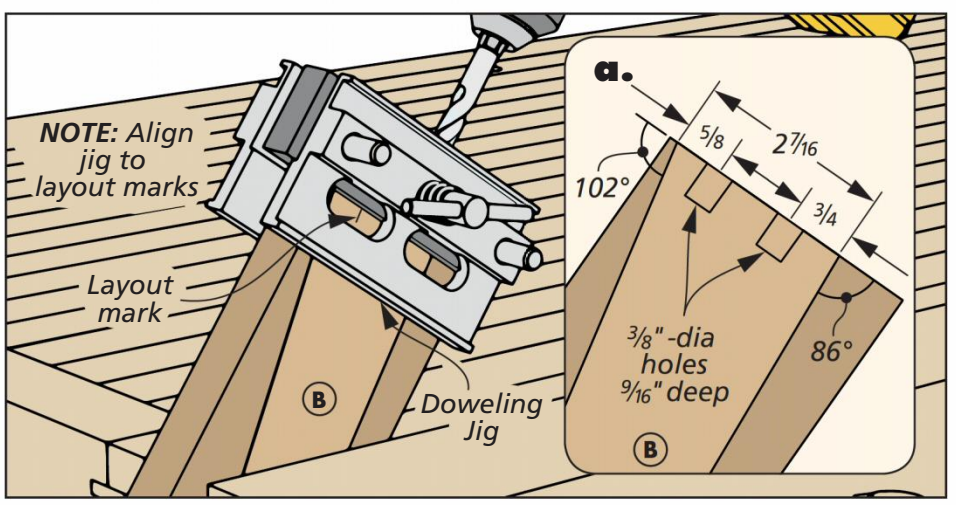

Holes for Dowels. A doweling jig lets you drill holes squarely in the end of the upright and foot. Drill the holes in the feet (shown here) before you taper them. On the upright, cut the miter first.

Illustrator: Erich Lage

Three-sided **STRETCHERS**

Looking at the main drawing, you'll see that there are three 1"-thick stretchers that bring the legs together to form the structure of the lamp. The basic profile is the same for all three stretchers — a simple triangle. (Once again, there's a full-size pattern for these available at *Woodsmith.com/247*.)

The stretchers are glued up from three triangle-shaped pieces. Assembling the stretcher this way adds a little work to the process, but it has the benefit of a seamless look. The points of the triangle are squared off with a notch cut in them to receive the legs. Bolts and threaded inserts hold everything together.

Each stretcher is then customized according to its position on the lamp. The details below show what needs to be done for each stretcher.

STRETCHER BLANKS. To get the ball rolling, cut blanks long enough to make the nine pieces required for the three stretchers. While you're at it, make an extra piece for a clamping jig to assemble the stretchers (Figure 1 at the top of the next page).

The patterns that I mentioned earlier for the stretchers have the basic triangle shape. You can use that as a template to shape the triangles at the table saw or with your router and a pattern bit.

GLUE UP. The jig you see in Figure 1 is the best way to glue up the stretchers with tight joint lines. That extra piece you made is cut in half and used for the clamping blocks.

SQUARING OFF. Squaring off the points of the stretchers is easily done at the table saw. Just set your rip fence to the distance shown in detail 'd' on the

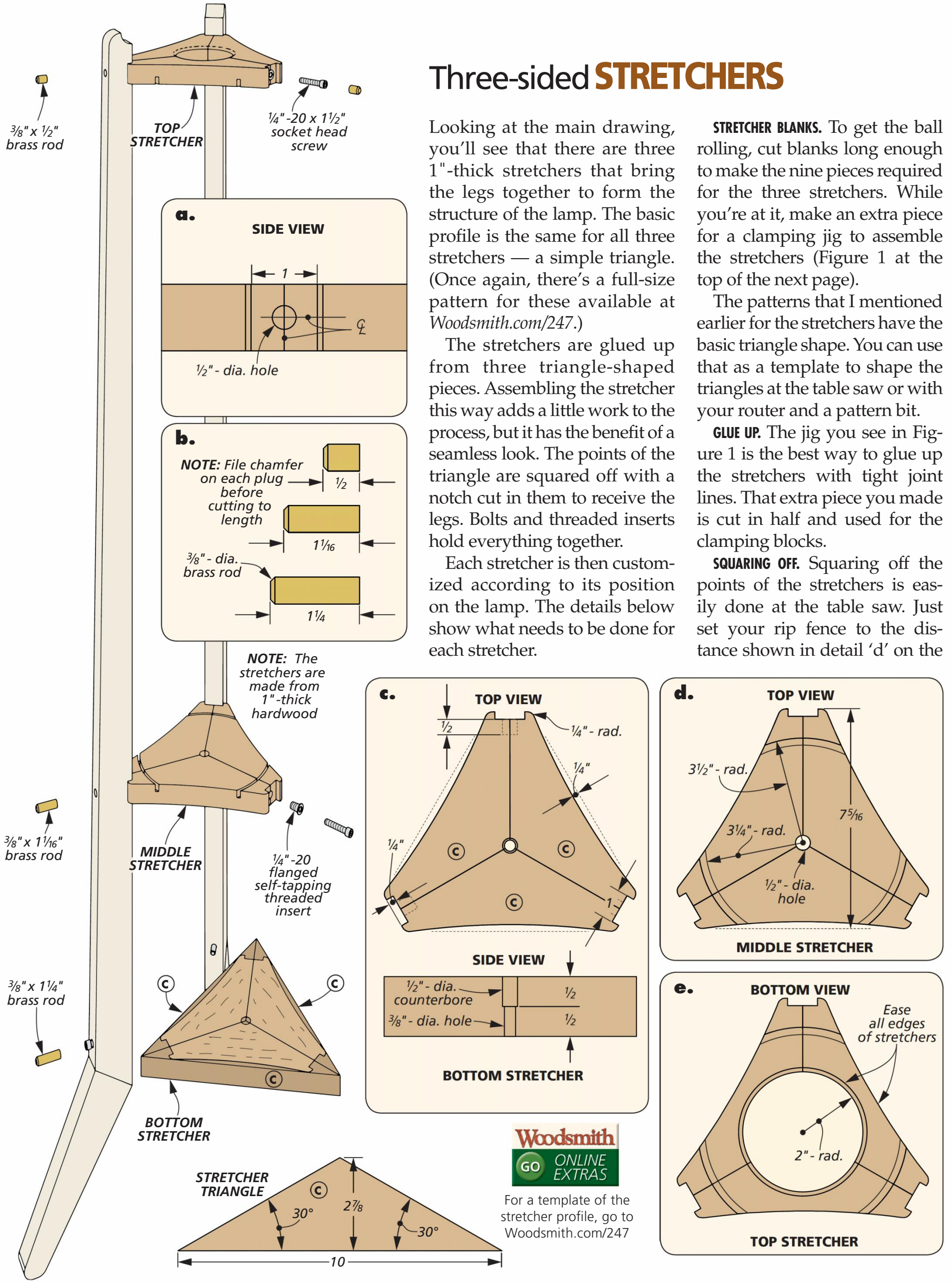

Woodsmith GO ONLINE EXTRAS

For a template of the stretcher profile, go to Woodsmith.com/247

MAKING THE STRETCHER

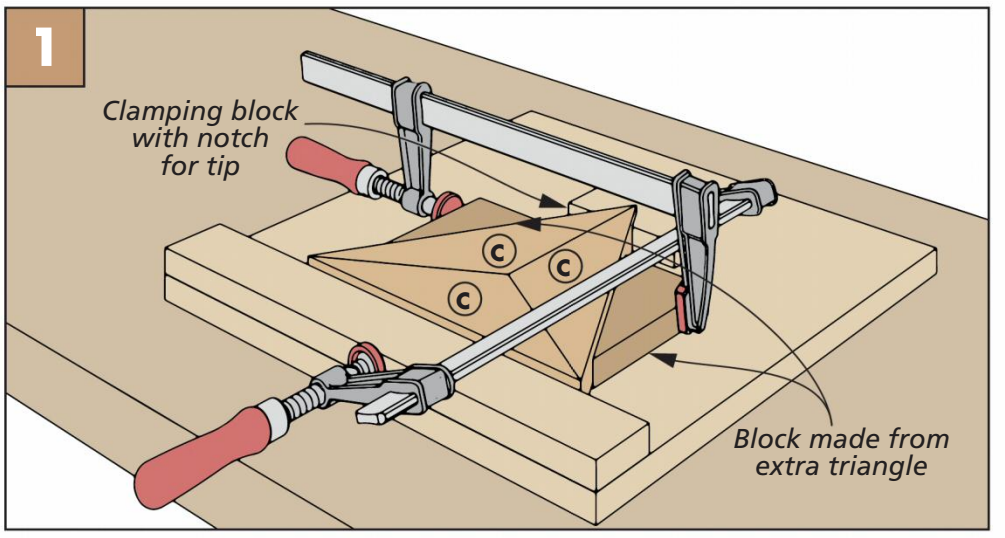

Glueup Jig. Gluing up angled pieces of wood can be a slippery affair. This jig guarantees that the triangle parts for the three stretchers will come together tightly and uniformly.

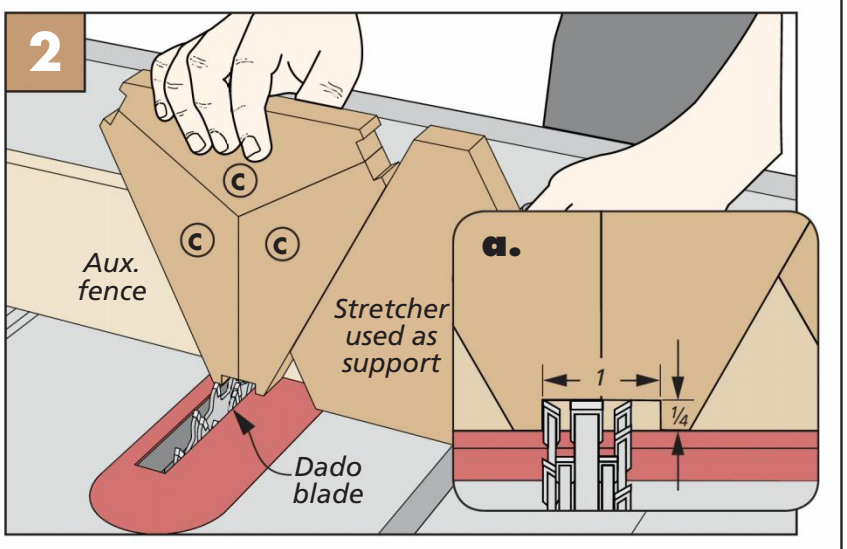

Notches. To make perfect notches, use an auxiliary fence on your miter gauge combined with one of the stretchers as a support while nibbling away the notch.

previous page and trim the tips of all the stretchers. Then over at the bench, it's time to bring the doweling jig back into the mix to make the ½" holes that hold the threaded inserts.

NOTCHES. There's one more trip to the table saw, this time using the miter gauge. You need to cut the notches in the stretchers that cradle the legs. The simplest way to do this is to use one of the stretchers to support the other while nibbling away the notch (Figure 2 above).

STRETCHER DETAILS. Now it's time to modify each stretcher according to its position on the lamp. I started by routing the slot in the middle and upper stretchers for the shade (Figure 1 below). Then I drilled the appropriate holes in each over at the drill press. The hole in the top stretcher is large enough that I used the circle cutter you see in Figure 2 below. That leaves you with three details to complete the stretchers, starting with the overall final shape of each piece.

CURVED EDGES. The three edges of the stretchers have a subtle arc. That's easy to create using the template I mentioned earlier. Then install the threaded inserts. I used some epoxy to keep them in place. Lastly, make the brass plugs that will cover the screws (detail 'b' on the previous page).

With that task done, it's time to pack away the woodworking tools and clean up a bit. You've got a shade to make and some wiring to take care of.

DEFINING EACH STRETCHER

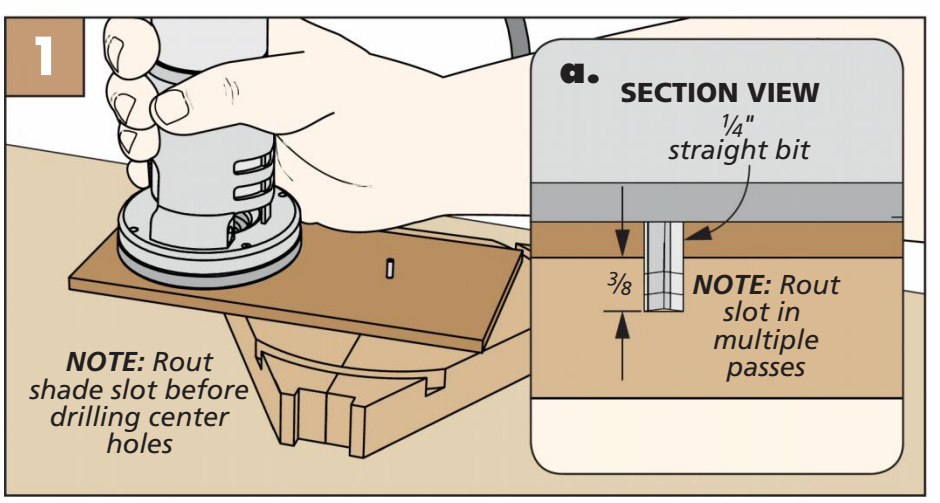

Trammel. Making the slot for the lamp shade is best done with a trammel attached to a palm router. Routing the slot in multiple passes ensures smooth results.

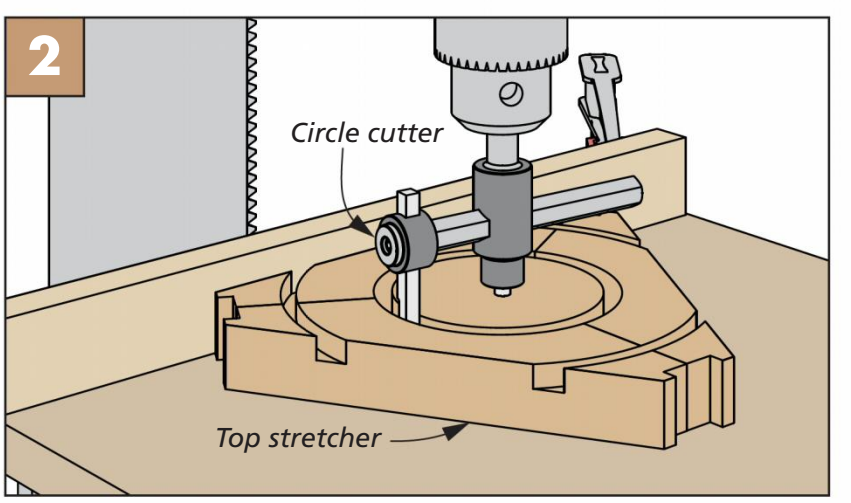

Circle Cutter. The large hole in the top stretcher gives you access to the bulb. To prevent burning, make sure the bit is sharp and take your time cutting the hole.

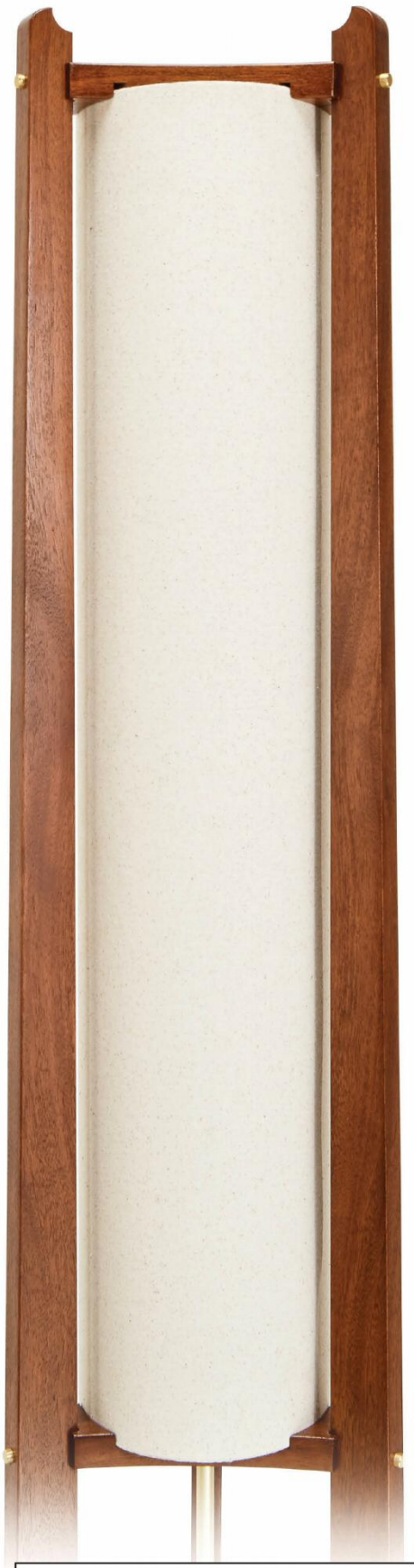

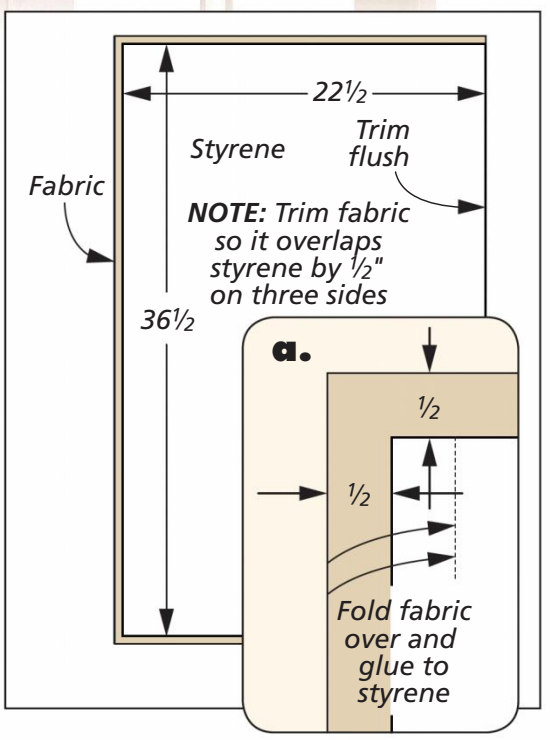

Making the SHADE

Making the shade for the lamp is not part of the normal routine in a woodworking shop, but hey, we're flexible right? At any rate, the step-by-step photos and drawings here should shed some light on the task (pun intended).

Here's a quick rundown of the supplies needed to pull this off. The shade is made of cloth purchased from a local fabric store. The material is adhered to a piece of adhesive-backed styrene that works well for this purpose. A pair of wire rings are needed to create the shape of the shade. And you'll also need some fabric glue. Sources on page 66 will help you locate these supplies.

SIZE THE STYRENE. The drawing below shows the final size of the styrene backing. Once this is cut, set it aside and focus on the fabric for the shade.

SIZE THE FABRIC. Start by ironing the fabric to remove any wrinkles. Then cut a piece that's larger than the styrene by a few inches in all directions. (The fabric will be trimmed after it's adhered to the styrene.) Now, tape the fabric down to a clean worksurface, removing any slack (Photo 1).

BRING THEM TOGETHER. For the next step, it's nice to have some helping hands. Place the styrene over the fabric. Do a thorough visual inspection to ensure that the fabric is straight in relation to the styrene. Start to peel the backing from the styrene at one end and position it on the fabric. Slowly pull off the backing while pressing the styrene in place (Photo 2). When the backing is completely removed, use a J-roller to firmly adhere the fabric to the styrene by rolling from one edge to the other.

FINAL TRIM. As you see in Photo 3, trim the fabric so it overlaps the styrene by ½" on the top,

Rough Sizing. To start, iron the fabric and tape it in place. This is the time to ensure that any pattern in the fabric weave is aligned with the backing.

Attach the Styrene. With the help of a friend, peel the backing off the styrene. A J-roller (inset) does a good job of adhering the backing to the fabric.

Final Trim. Three edges of the fabric are trimmed longer than the backing. The long edge is folded and glued to the styrene (inset).

Roll Shade & Glue. Glue, cauls, and clamps are required to properly shape the shade. Leave the shade clamped for a while to ensure the glue is dry.

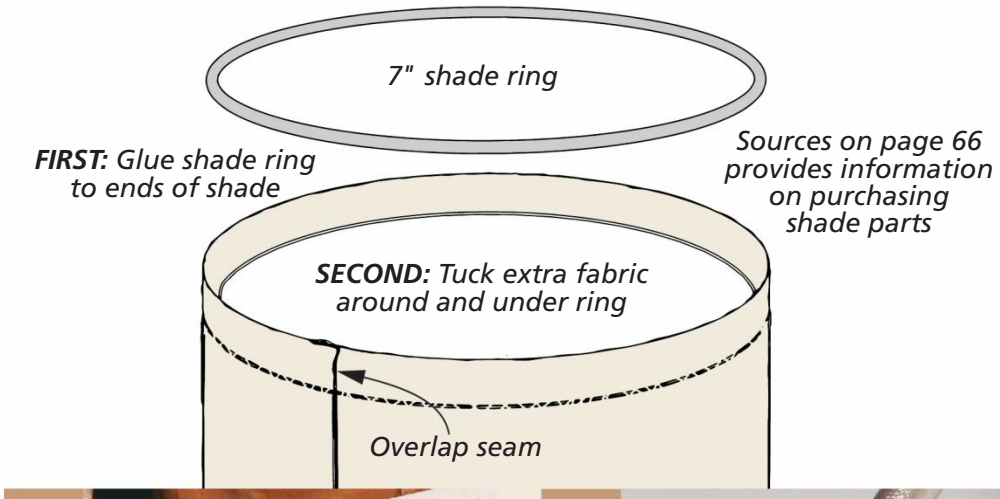

Ring to Styrene. Glue the rings to the ends of the shades. Binder clips hold the rings in place.

Shade to Ring. Use a flat screwdriver to tuck the fabric under the ring.

bottom, and one edge. This is cleanly done with a rotary cutter. On the other long edge, trim the fabric flush with the styrene.

FINISHED SEAM. Next, fold and glue the extra fabric to the styrene backer along the long edge (Photo 3 inset). When the glue is dry, you can turn your attention to shaping the shade.

This starts by applying more glue on top of the fabric you just glued to the long edge. Then, place the trimmed edge inside the finished seam and clamp it with a caul that reaches through the shade (Photo 4). To finish the ends of the shade, see Photos 5 and 6 above.

FINAL DETAILS. While the shade is drying, I turned my attention to wiring the lamp. There's an online extra that walks you through the process. (You'll want to stain and finish the lamp before working on the wiring.)

To complete the assembly, you can drop the shade in place and install the top stretcher. The brass plugs that go over the screws are held in place with a friction fit. Now this hip little lamp is ready to take its place in the room of your choice. W

Materials, Supplies & Cutting Diagram

A	Uprights (3)	1 x 2 - 54
B	Feet (3)	1 x 2 7/16 - 10
C	Stretcher Triangles (9)	1 x 2 7/8 - 10

- (3) 3/8"-dia. x 6" Dowel
- (9) 1/4" x 20 Socket Head Screws
- (9) 1/4" x 20 Threaded Inserts
- (1) 3/8"-dia. x 1" Lamp Nipple
- (1) 3/8"-dia. x 9" Brass Rod
- (1) 1/2"-dia. x 25 5/8" Brass Tube
- (1) 3/4"-dia. x 1 1/2" Brass Rod
- (1) Inline switch
- (1) Keyless Socket
- (1) 8' 18 gauge Electrical Cord
- (2) 7" Shade Rings

1" x 6 1/2" - 60" Mahogany (Three boards @ 3.4 Bd. Ft. each)

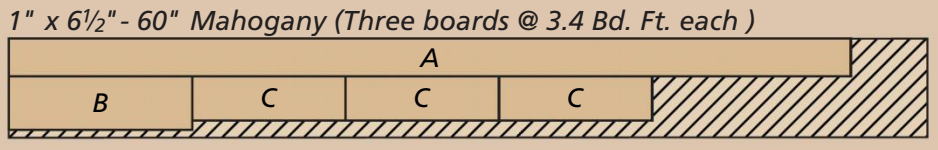

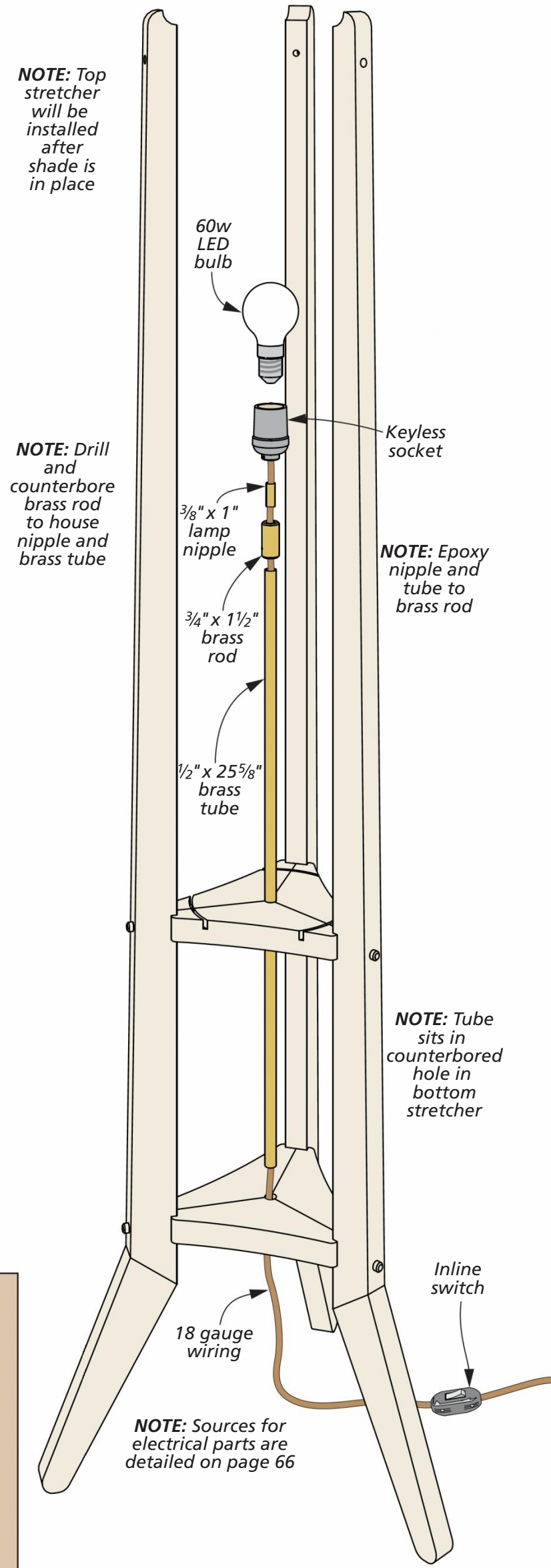

Woodsmith GO ONLINE EXTRAS Detailed instructions for wiring the lamp are available at Woodsmith.com/247

Shop Stool

Don't let the slender, graceful lines of this stool fool you. Solid construction makes it well-suited to stand up to years of use in your shop.

Working in a small shop, I used to view a shop stool as just one more thing to get in the way of getting a job done. But as I've aged, I've come to appreciate having a stool more and more. And not just for sit-down tasks. Having a place to take a load off your feet for a few minutes really does make spending long stretches of time in the shop more bearable, as well as enjoyable.

This is not just a shop stool, however. The casual styling makes it suitable for a kitchen island or tall table, as well. Plus, you'll have the satisfaction of making it yourself. Ours is crafted from walnut and hickory, but just about any hardwood will do. And as an added bonus, this project is a great excuse to build the shaving horse on page 26. Or maybe it's the other way around. Building the shaving horse gives you an excuse to make a few of these stools.

Written by: Vincent Ancona, Project Design: Dillon Baker

Making the **SEAT**

Most of the work involved in making this stool goes into the seat. The seat starts out as a square, glued-up blank, as shown at right.

MORTISES. I laid out the mortises for the legs of the stool by first drawing diagonal lines on one face of the blank to locate the center. Then after using a compass to draw a circle, I used the same compass setting to step off three equally spaced points on the circle for the mortise locations. The top view in the right-hand margin shows the location of these.

The mortises are nothing more than holes drilled at a 15° angle. As you can see in Figure 1 below, I used a drilling guide for this step. If you don't own a drilling guide, you could drill these by hand using a bevel gauge as a guide to help you hold your drill at the proper angle.

SHAPING THE SEAT. With the holes drilled, you can cut the seat to shape at the band saw. To create a more comfortable surface, I hollowed out the top of the seat slightly using an angle grinder and a special shaping disk, as shown in Figure 2.

REEDING. For a decorative touch, I added a carved detail to the edge of the seat, as shown in detail 'a' above. Start by penciling in some layout lines all around the seat to establish the spacing. Then simply cut a series of shallow grooves using a V-gouge, just as you see in Figure 3 below. Don't worry about making these grooves perfectly parallel. A little inconsistency will simply add to the handcrafted look. Once this is done, chamfer the top and bottom edges of the seat.

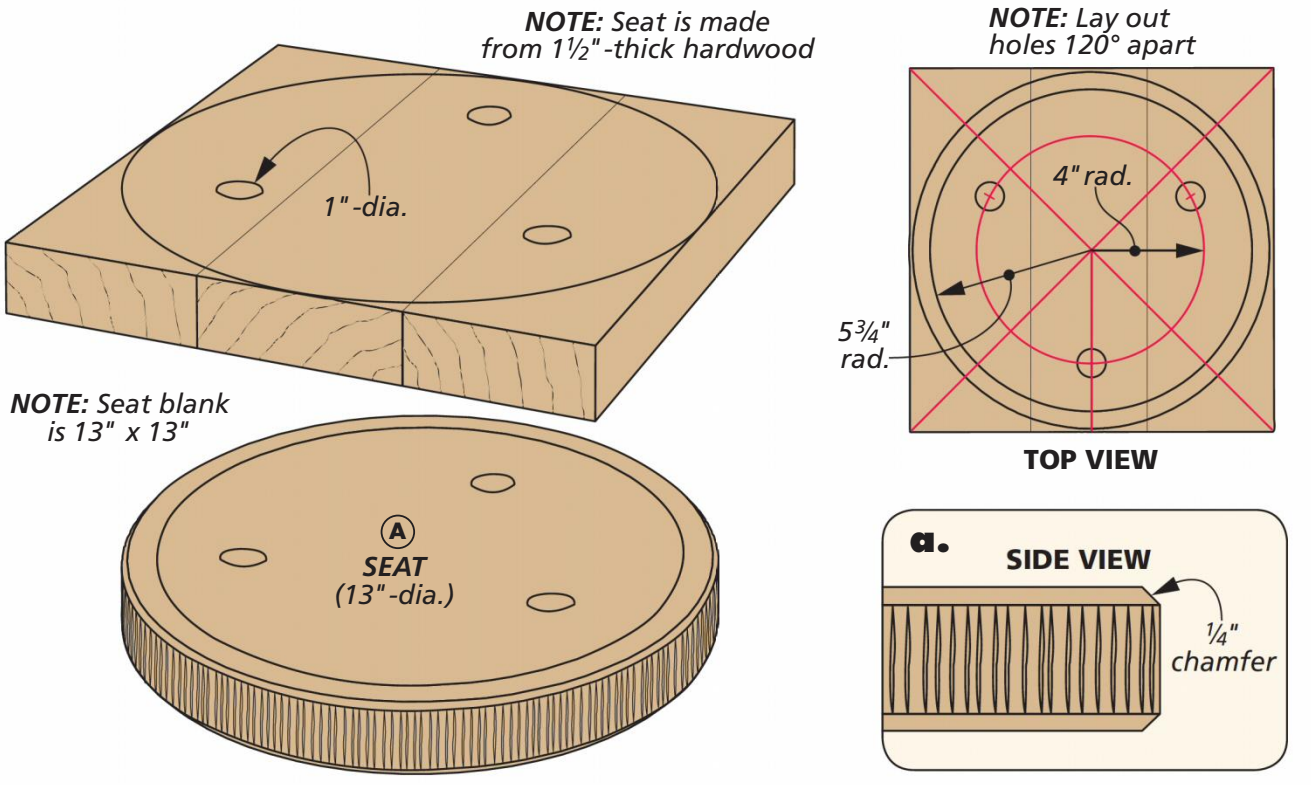

SEAT SHAPING DETAILS

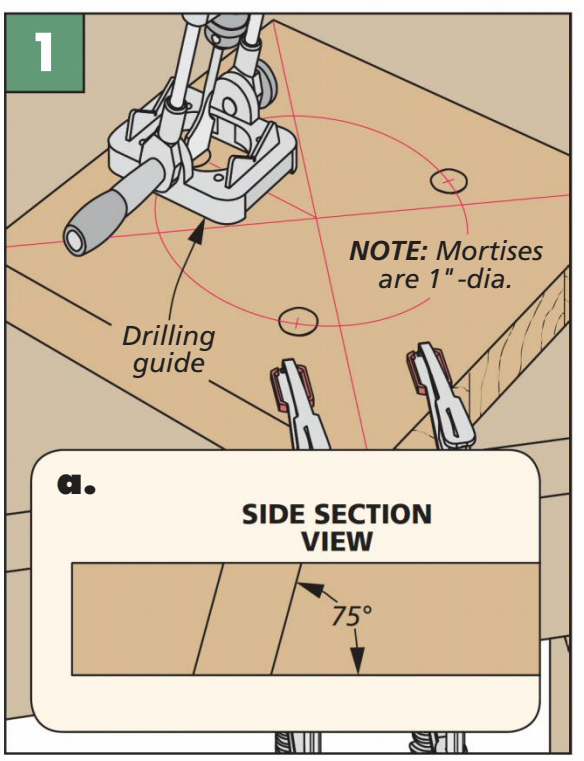

Drill Mortises. Using a drilling guide, drill the mortises at a 15° angle, referencing off the centerpoint of the blank.

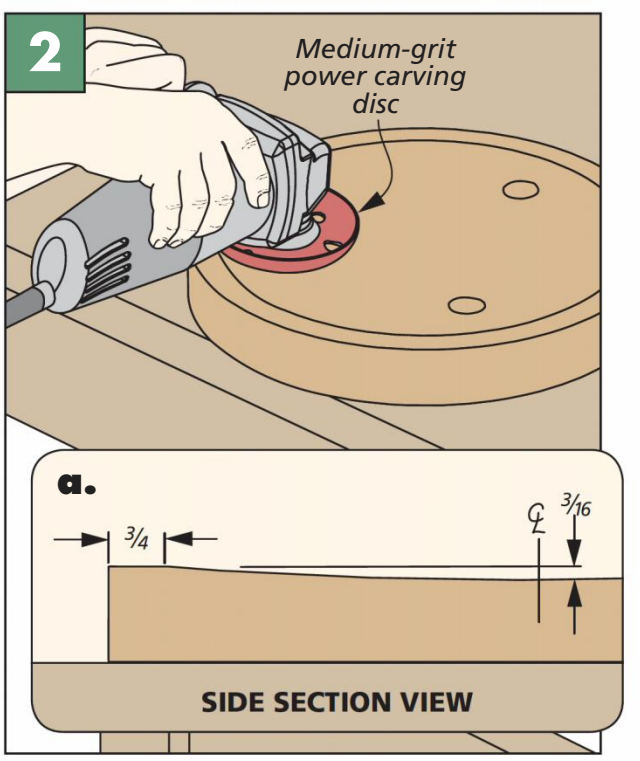

Hollow the Seat. A power carving disc (refer to page 66 for sources) makes quick work of dishing out the seat.

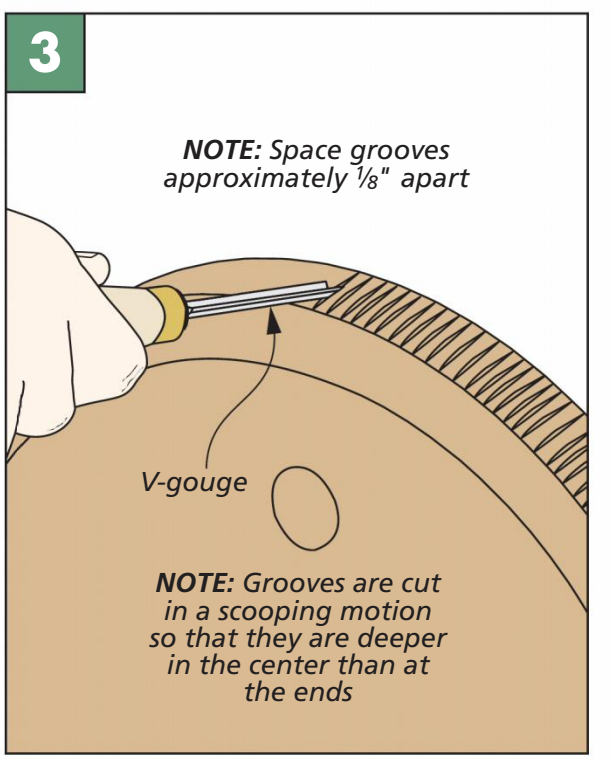

Add Reeding. A V-gouge is used to carve a series of decorative grooves around the edge of the seat.

Illustrations: Dirk Ver Steeg

A strong **UNDERCARRIAGE**

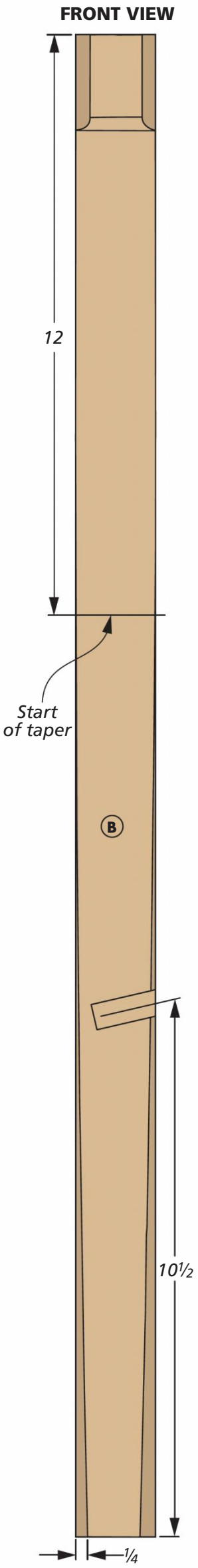

With the seat wrapped up, you're ready to start making the legs and stretchers for the stool. As you can see in the drawing at right, these parts are about as basic as it gets. They're all just straight, round, tapered pieces. The real challenge comes in fitting them all together.

START WITH THE LEGS. I started with the legs. All three legs are identical in size and shape. The only difference between them is the mortises for the stretchers. Each one begins as a square blank cut from 8/4 hickory.

I took care of the tenons on the ends of the legs as well as the mortises for the stretchers while the blanks were still square. As you can see in Figure 1 on the next page, the tenons are made at the router table using a core box bit and a jig to hold the blank.

The mortises for the stretchers are up next. Like the mortises in the seat, these mortises for the stretchers are drilled at an angle. But this time, I opted to drill them at my drill press, tilting the drill press table to achieve the correct angle. Figure 2 shows how this is done.

One thing to note here is that the mortises in the two front legs are drilled at 13° while the mortise in the rear leg is drilled at 15° (Figures 2a and 2b).

With the mortises out of the way, you can round and taper the legs according to the dimensions shown in the drawing at left. Here is where the shavehorse comes into play (along with a drawknife and spokeshave). Once the legs are shaped, set them aside for now while you work on the stretchers.

MOVE ON TO THE STRETCHERS. Making the stretchers is pretty much like making the legs. They both start off as square blanks. After routing tenons on the ends, you'll drill a mortise in the center of the front stretcher to hold the rear stretcher. This mortise isn't angled, so there's no need to tilt your drill press table.

The stretchers are also shaped on the shavehorse, but these pieces are tapered at both ends. The drawing at the top of the next page will give you an idea of the basic profile to aim for.

ADD SOME WEDGES. To reinforce the joints between the seat and the legs, I added some wedges (detail 'b' above). After dry assembling all the parts, mark out the wedge orientation on the tenons, as shown in detail 'a' above.

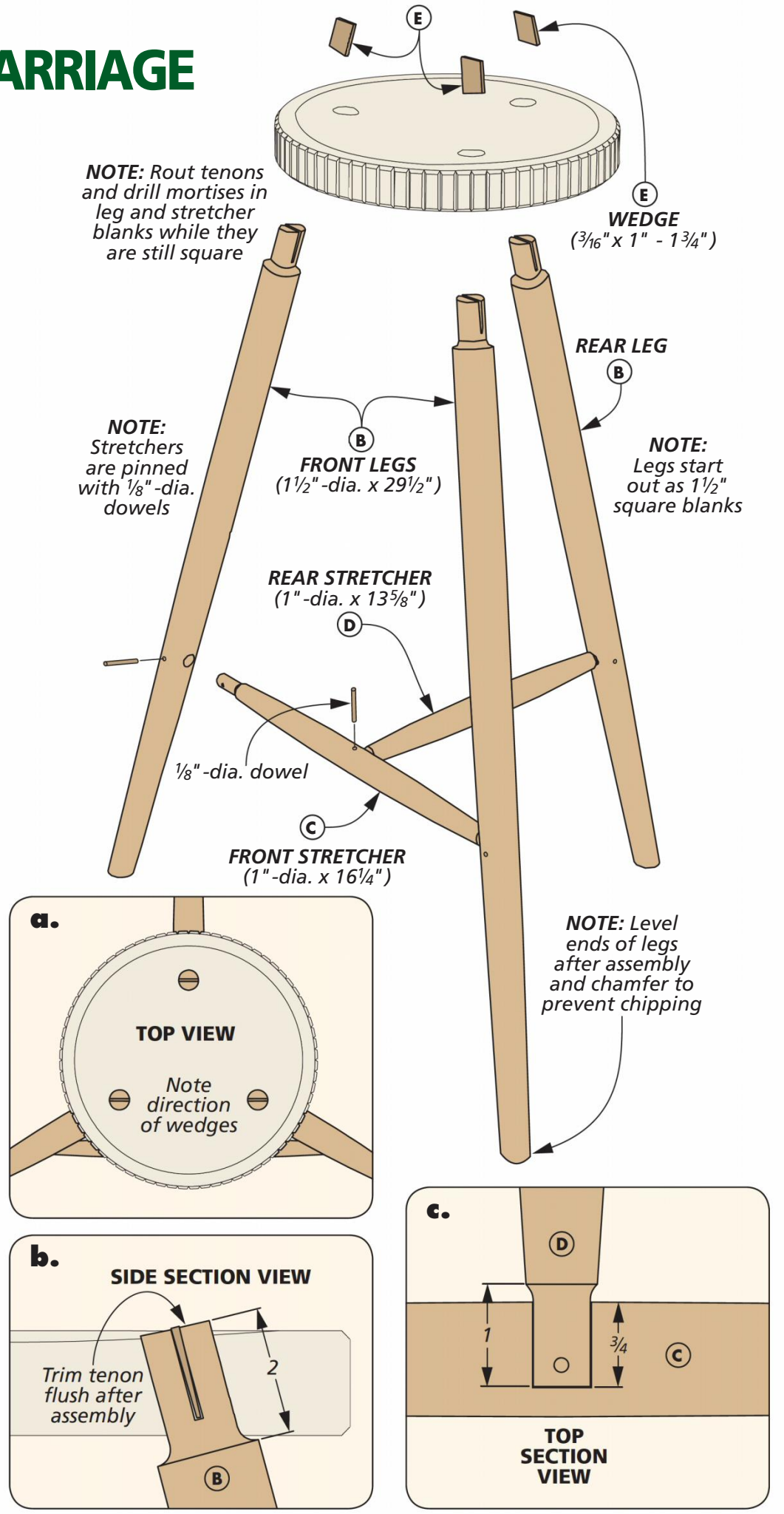

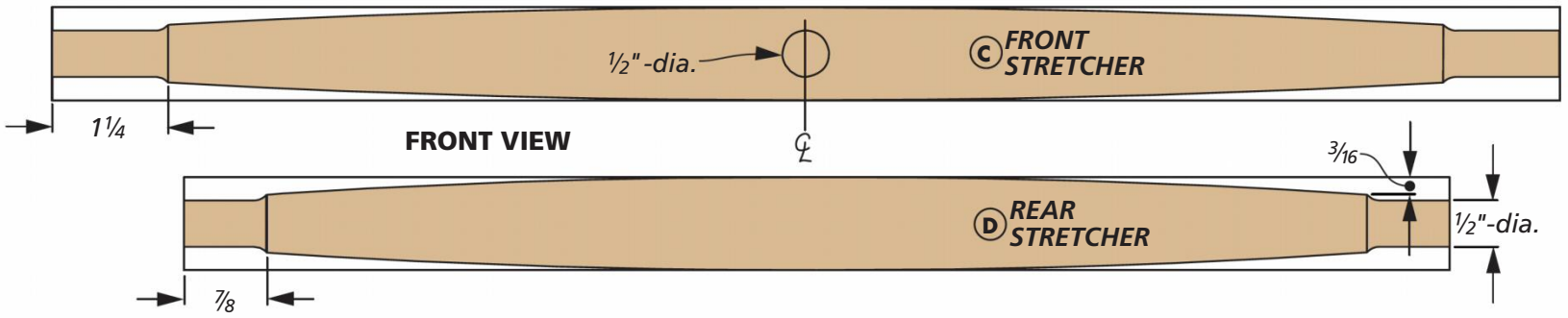

NOTE: Stretchers start out as 1" square blanks

The kerfs for the wedges are cut at the table saw. Fig. 3 below shows how I used a support block with a hole in it to hold the leg on end as I made the cut. The wedges are simply cut from some scrap at the band saw.

After gluing up the stool and adding the wedges, you can trim the leg tenons and scrape and sand them flush with the seat. The bottoms of the legs should also be trimmed and sanded so the stool sits flat.

DOWEL PINS. Finally, to reinforce the stretchers, I pinned the tenons of each joint with some dowels, as shown in Fig. 4 below. Then after applying an oil finish, the stool is ready to take its place in your shop. W

LEG JOINERY

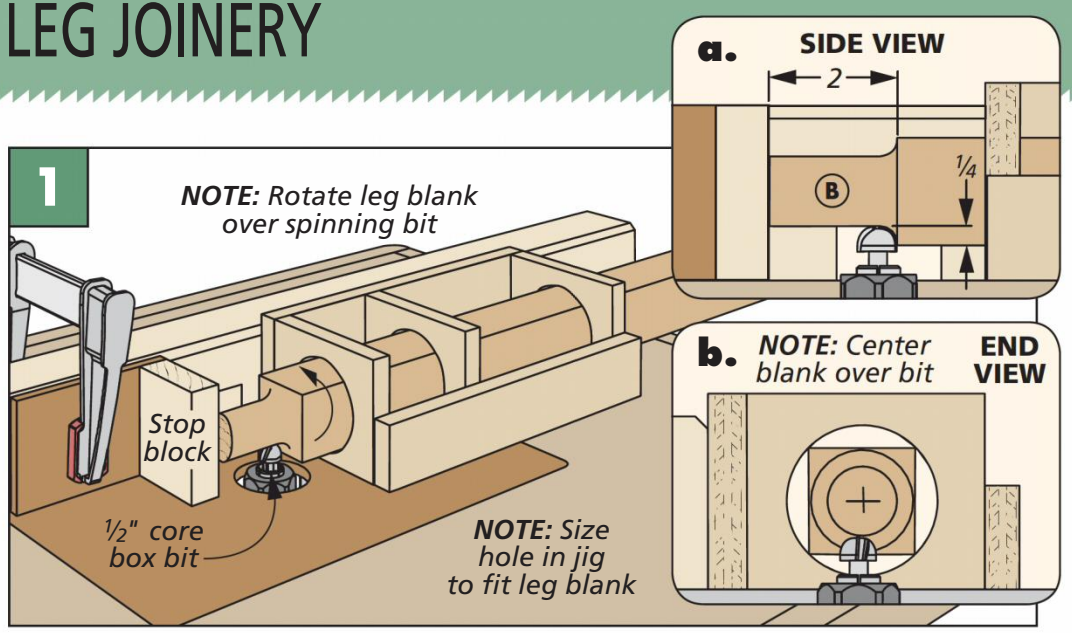

Turn the Tenons. A jig holds the blank, allowing you to rotate it to turn the round tenons. A stop block controls the length of the tenon.

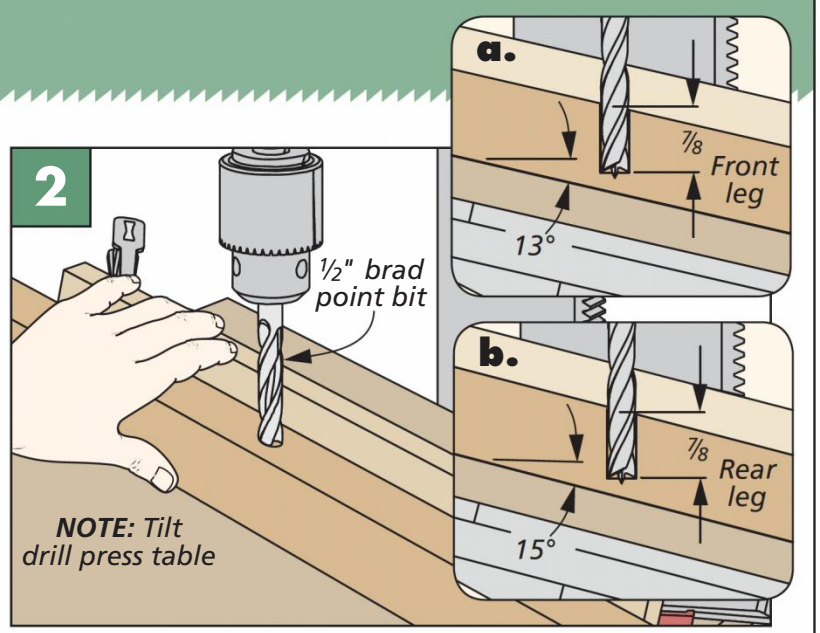

Drill Mortises. To drill the angled holes for the stretcher mortises, tilt the table of your drill press.

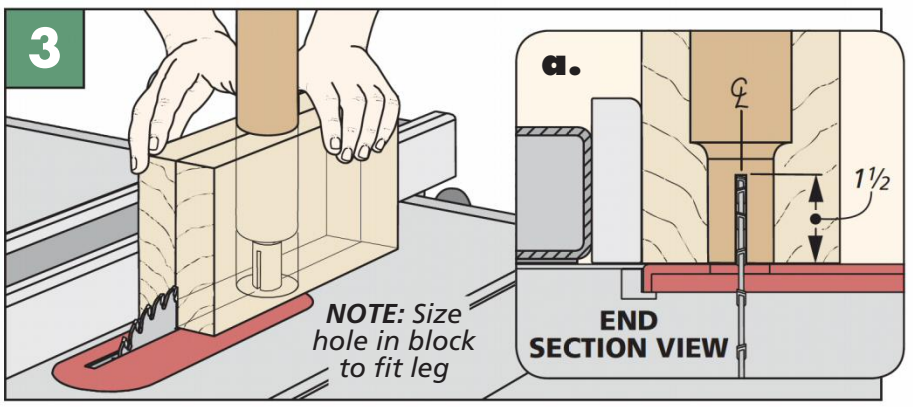

Wedge Kerfs. A large block with a hole supports the leg on end and guides it over the blade to cut the kerf.

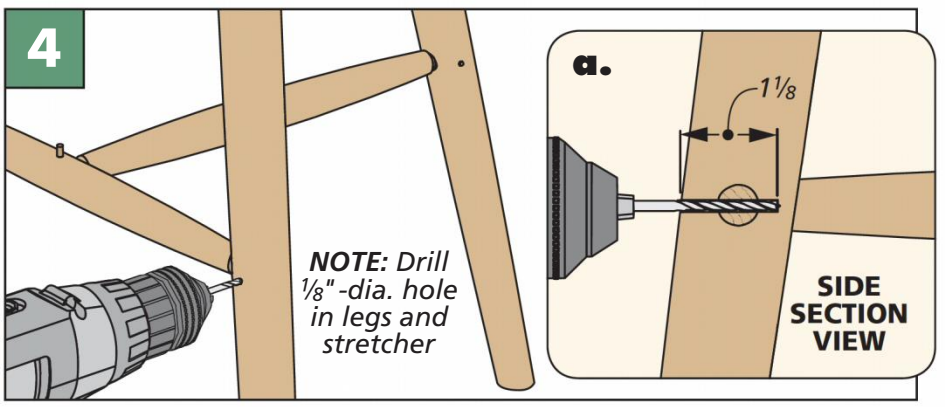

Pin the Joints. To reinforce the stretchers, drill a hole through the leg and into the tenon. Then pin the joint with a dowel.

Materials, Supplies & Cutting Diagram

A	Seat (1)	1½ x 13 - 13	**C**	Front Stretcher (1)	1-dia. - 16¼	**E**	Wedges (3)	3/16 x 1 - 1¾
B	Legs (3)	1½ -dia. - 29½	**D**	Rear Stretcher (1)	1-dia. - 13⅝	•	(1) ⅛"-dia. x 36" Walnut Dowel	

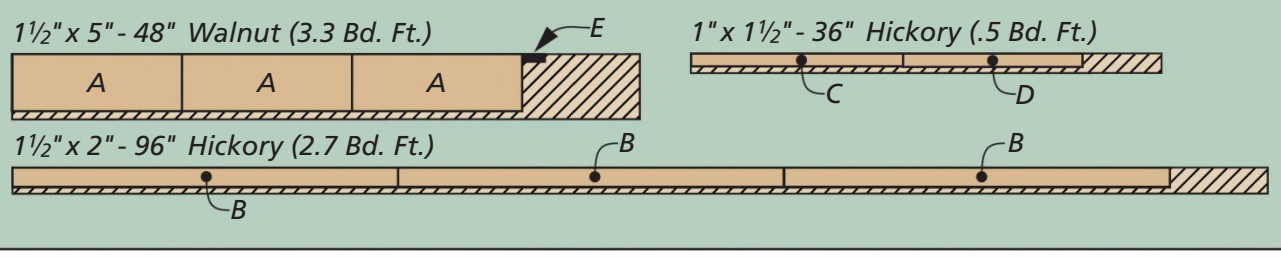

Woodsmith GO ONLINE EXTRAS

Plans for building the tenoning jigs are available at Woodsmith.com/247

Written by: Logan Wittmer; Project Design: Chris Fitch

Empire Chest of Drawers

This take on the classic Empire chest of drawers is a modern rendition. It offers updated construction techniques while staying true to the design of Empire furniture.

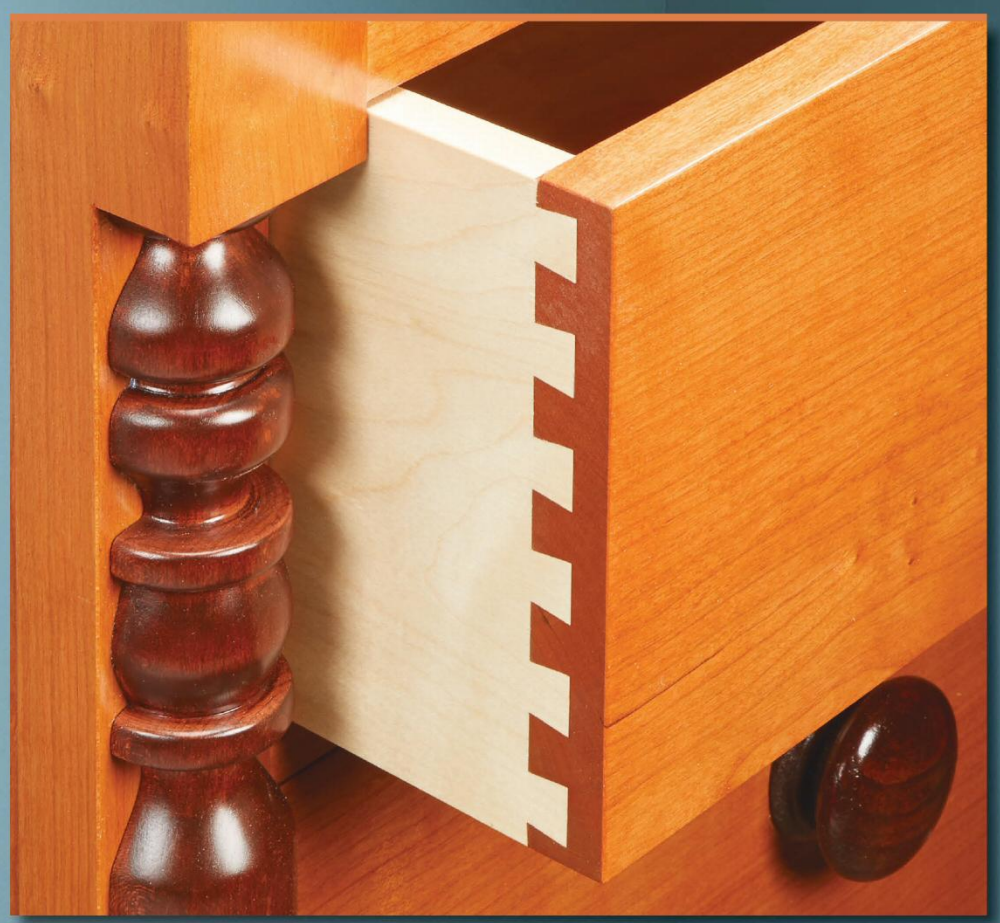

▲ The chest of drawers features five large drawers. Hardwood construction combined with half-blind dovetails make these drawers rock-solid no matter how much you load them up.

▼ The turned feet appear to be an extension of the split turnings that decorate the front of the case. However, a clever construction method allows you to create this illusion nearly effortlessly.

When you hear the term Empire, the first thing that you think of may not be furniture. Personally, the term conjures images of Sith lords, Jedi, and light sabers. However, the Empire style of furniture has some interesting features that really appeal to me. And when I saw the design of this chest of drawers, I was excited to see how it all came together. Before you start building, let's quickly talk about what the Empire style is, and some of the design features.

A LUXURIOUS FEEL. The Empire design movement falls between the more popular Federal and Victorian styles (early to mid-19th century). The design was inspired by the Napolean-era style from France, and the furniture reflects this elegant and luxurious style.

Some of the traditional Empire design features can be found in this chest of drawers. This starts with the heavy proportions, and a top drawer that's larger than the rest of the drawers. As you work down the chest, the drawers are graduated.

SPLIT TURNING. Another feature indicative of Empire furniture is scrollwork or turnings, often sitting below the top drawer. Here, we've featured a pair of split turnings that mirror the feet. Don't worry, they're straightforward to make. And speaking of making, turn the page because it's time to get started building this Empire chest of drawers.

Illustrations: Dirk Ver Steeg

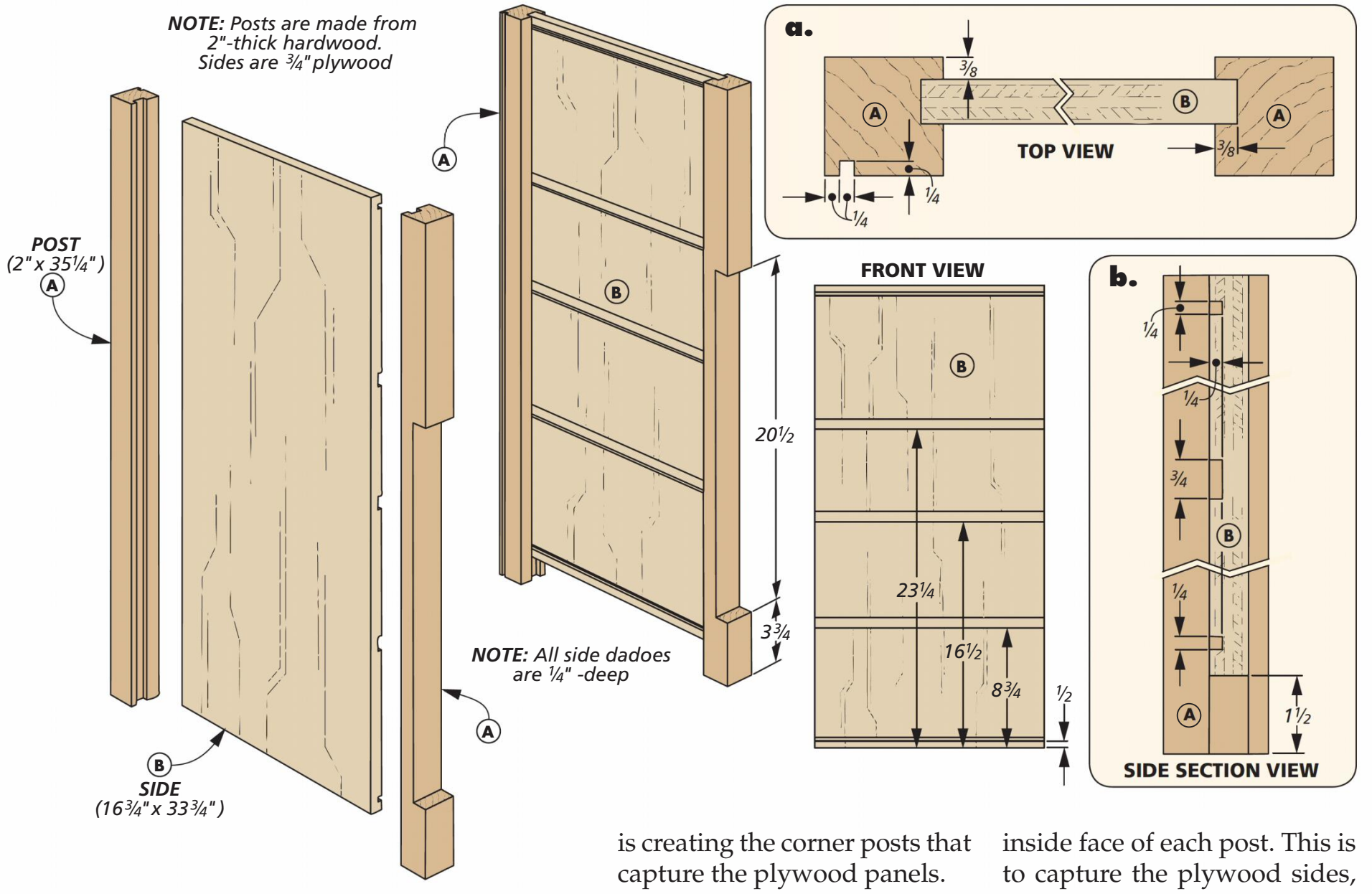

Create the SIDE PANELS

The case of this Empire chest is built out of plywood. Plywood dividers separate the drawer openings, and all the plywood gets covered in edging. Up first is creating the corner posts that capture the plywood panels.

HARDWOOD CORNERS. Start by milling the posts to size. I chose to use cherry, but just make sure that your stock of choice is available in 10/4 thickness for the posts (or you'll have to glue them up). At the table saw, cut a wide groove on the inside face of each post. This is to capture the plywood sides, like you see in the main drawing above and in detail 'a.'

Set the front posts aside for a moment, and cut another groove on the inside faces of the rear posts. This will be for the back that you'll create later.

FOOT HOLES. Now, you can drill a hole in the bottom of each post. These will be for the feet that you'll turn later. Take a look at the box to the left to see how this is done. In short, I used a jig to hold the leg vertically at my drill press. Then, I used a Forstner bit to drill the hole to the proper depth.

NOTCHED FRONTS. With the holes drilled, there's one more thing to take care of on the posts. And that's cutting the large notch in the front posts. To tackle these, I defined the ends of the notch at the table saw. Then, I cut the bulk of the waste away at the band saw (Figure 1, next page). Leave a little bit of waste here. You'll want to clean up the cut

VERTICAL HOLE JIG

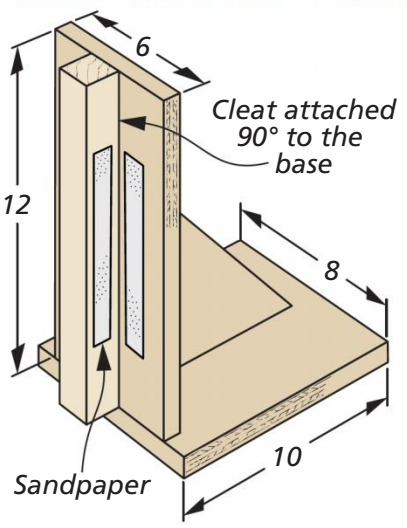

Drilling Guide. The guide is a right-angle block with a cleat attached to the face.

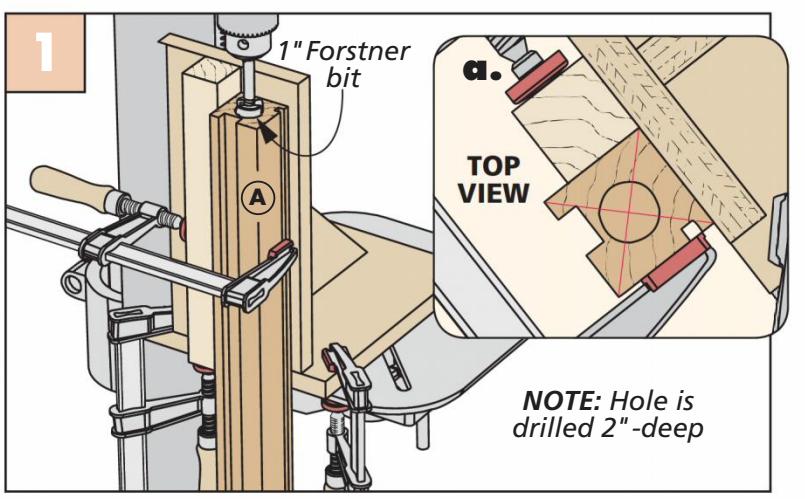

Foot Mortises. With the guide clamped in place, swing the table to one side to drill the holes for the feet. Back out the bit occasionally to clear the shavings.

at the router table (Figure 2). Just use a long auxiliary fence on the router table, and make a light, planing cut to clean up the face. Any remaining waste in the corners can be cleaned up with a sharp chisel.

SIDE PANELS. The sides of the chest (and the dividers) are plywood. Here, I chose a quality cherry veneer plywood. There's some simple joinery here, but first cut the side panels to size.

DADOES. Dadoes on the inside of the panels capture the dividers (detail 'b' previous page). The top and bottom divider have a tongue cut on the ends, so those dadoes will be a little narrower than the middle three.

When you're ready to cut the dadoes, you can pick your poison. Generally, for plywood panels (if they're not too large) I like to cut dadoes on the table saw. If you choose this route, set up the dado blade to match the plywood thickness. Alternatively, you could cut the dadoes with a router and straight bit. (I would use a narrower bit and make two passes for a snug fit.) See page 14 for some techniques on routing dadoes.

ASSEMBLY. After the dadoes are cut, you can glue the corner posts to the sides. Make sure to align the top of the posts flush with the sides. With the clamps applied and the glue drying, you can tackle a few final details on the side assemblies.

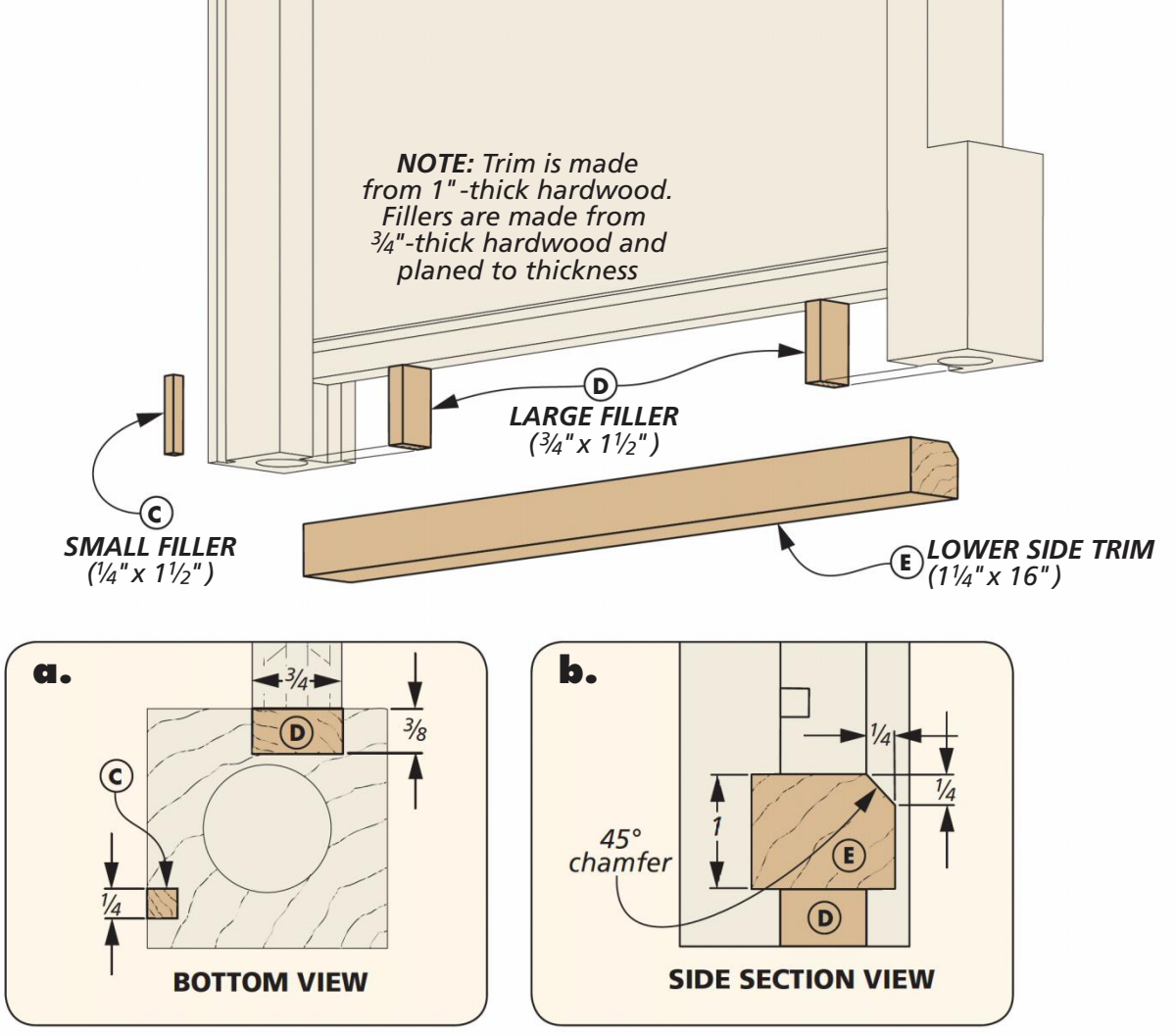

FILLERS & TRIM

After gluing up the side assemblies, you'll notice that the groove for the side panel is visible on the bottom of the corner post. So, you'll want to cut a small filler block and plug the groove, along with the groove for the back (detail 'a' and the main drawing above).

The last detail to knock out is a thick piece of trim that's attached to the bottom end of the side panel (detail 'b'). Start with a long blank, then rout a chamfer along one edge. You'll need another piece of trim for the front of the chest later, so I made an extra. Cut the trim to fit and install it with glue and a couple of pin nails to hold it while the glue dries.

MAKE A BIG NOTCH

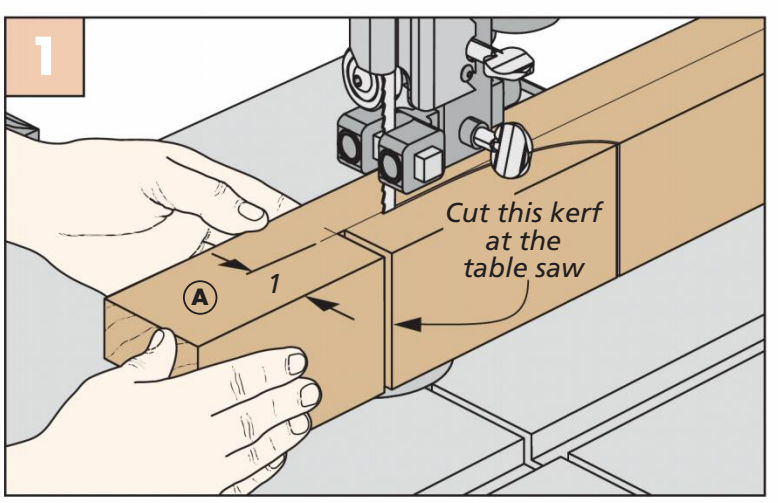

Post Notch. At the table saw, kerf the ends of the notch. Then saw out the waste at the band saw. Leave a small amount of waste inside the line.

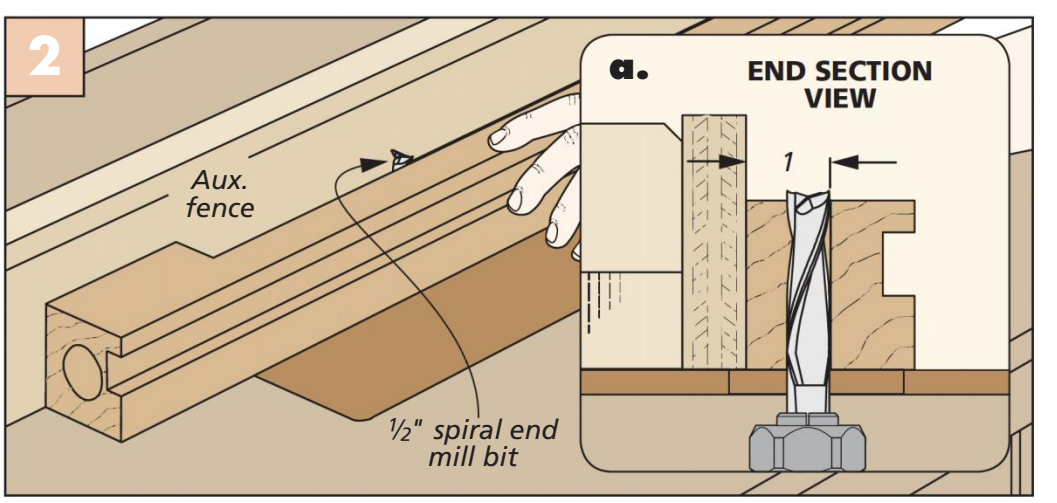

Planing Cut. Use a long auxiliary fence and spiral end mill bit at the router table to make a planing cut inside the notch. Remove a small amount of material with each pass to leave a smooth surface.

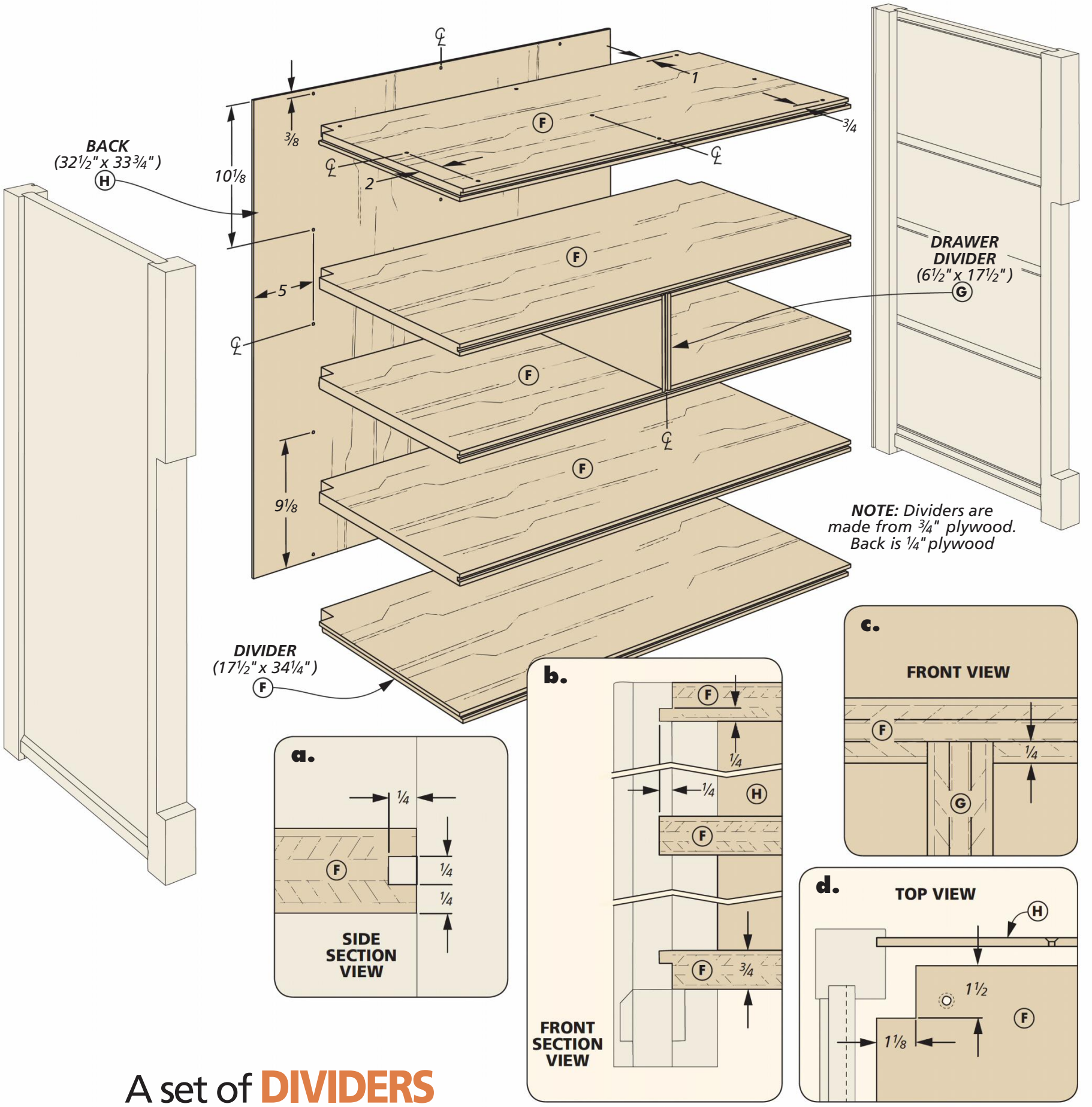

A set of DIVIDERS

Creating the dividers is up next. Like the side panels, the dividers are made from plywood. After the dividers are installed, you'll cut some hardwood edging to dress them up.

PLYWOOD DIVIDERS. As you can see in the drawing above, there are a total of five horizontal dividers. They're all the same size. A tongue cut on each end of the bottom and top dividers fits in the narrower dadoes in the side assemblies (detail 'b').

After cutting the dividers to size, you can cut a dado in the second and third divider, as seen in detail 'c.' This is to fit a shorter, vertical drawer divider (simply cut this to size). Like before, I cut these at the table saw with a dado blade. Before leaving the table saw, form the tongue on the ends of the bottom and top divider.

GROOVED FRONTS. The front edge of the plywood dividers will receive some hardwood edging that you'll make in a little bit. To create a strong bond, the edging is attached using a tongue and groove. Cut the groove in the front edge of the dividers with a slot-cutting bit, as seen in Figure 1. Cut the groove in all of the divider fronts, including the drawer divider.

NOTCHES. Back at the bench, you have two more tasks before you can install the dividers in the case. The first is to notch the back corners of each divider, as seen in the main drawing on the

previous page and detail 'd.' The notch will fit around the back corner post. To create the notch, simply cut to the layout line with a jig saw. The final detail is to pre-drill the holes in the top divider to attach the top later (drawing on previous page).

ADD THE DIVIDERS. Now, you're ready to glue the dividers to the side panels. These simply slip into the dadoes, along with a bead of glue. To keep the assembly square, I cut the back to size and slipped it in the groove in the rear post (don't attach it yet). Then, clamp the case together while the glue dries.

EDGE IT

Now can tackle the edging to cover the plywood edges. This is cut from hardwood, and has a tongue cut on one edge (detail 'a' and Figure 2) to slip in the groove in the divider. Note that the top edging is wider to create the protruding drawer opening. After forming the tongue, cut each piece to fit. I removed the back so I could glue and clamp the edging in place. Lastly, apply the front trim piece below the bottom divider. You can see the edging in detail 'c.'

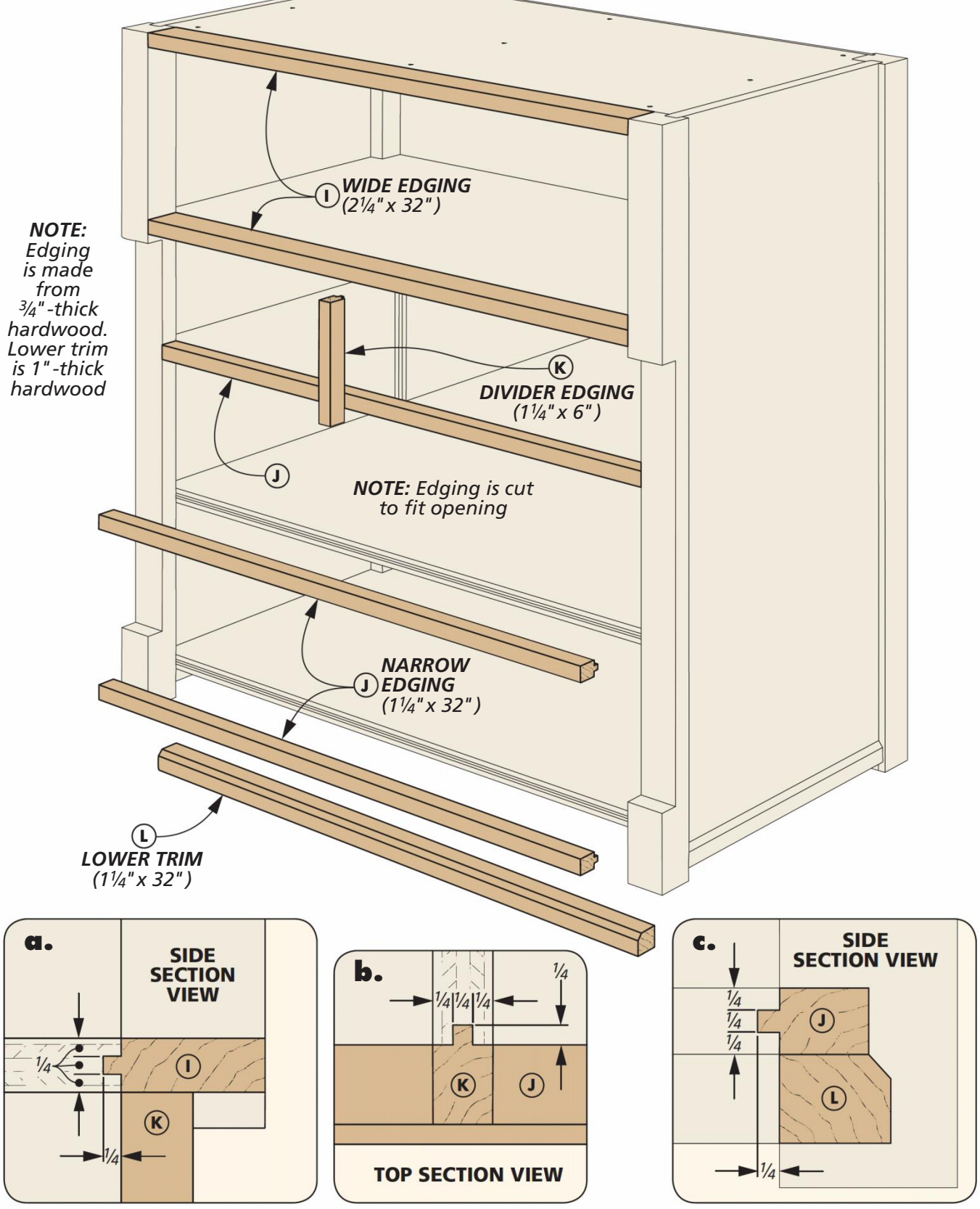

GROOVE & TENON

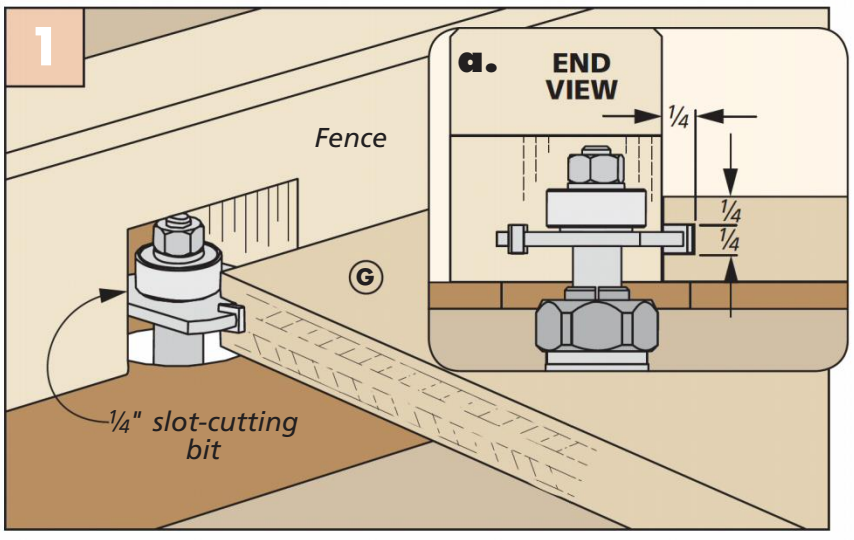

Slot the Dividers. Using a slot-cutting bit in the router table, cut a groove in the front edge of each divider. Use a miter gauge to guide the drawer divider during cutting.

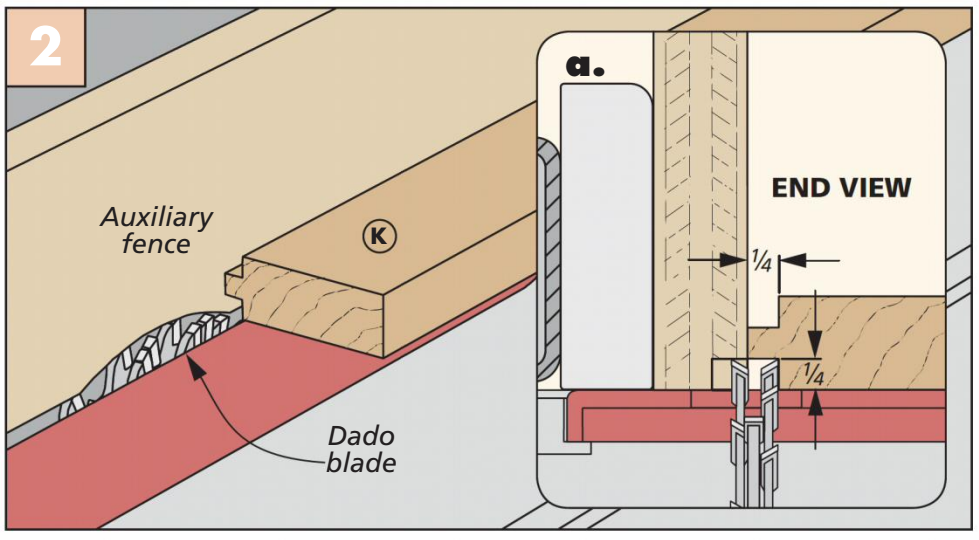

Edging Tongue. Bury a dado blade in an auxiliary fence to form a tongue on one edge of all the edging. Check the fit with a scrap piece to get a snug fit in the divider groove.

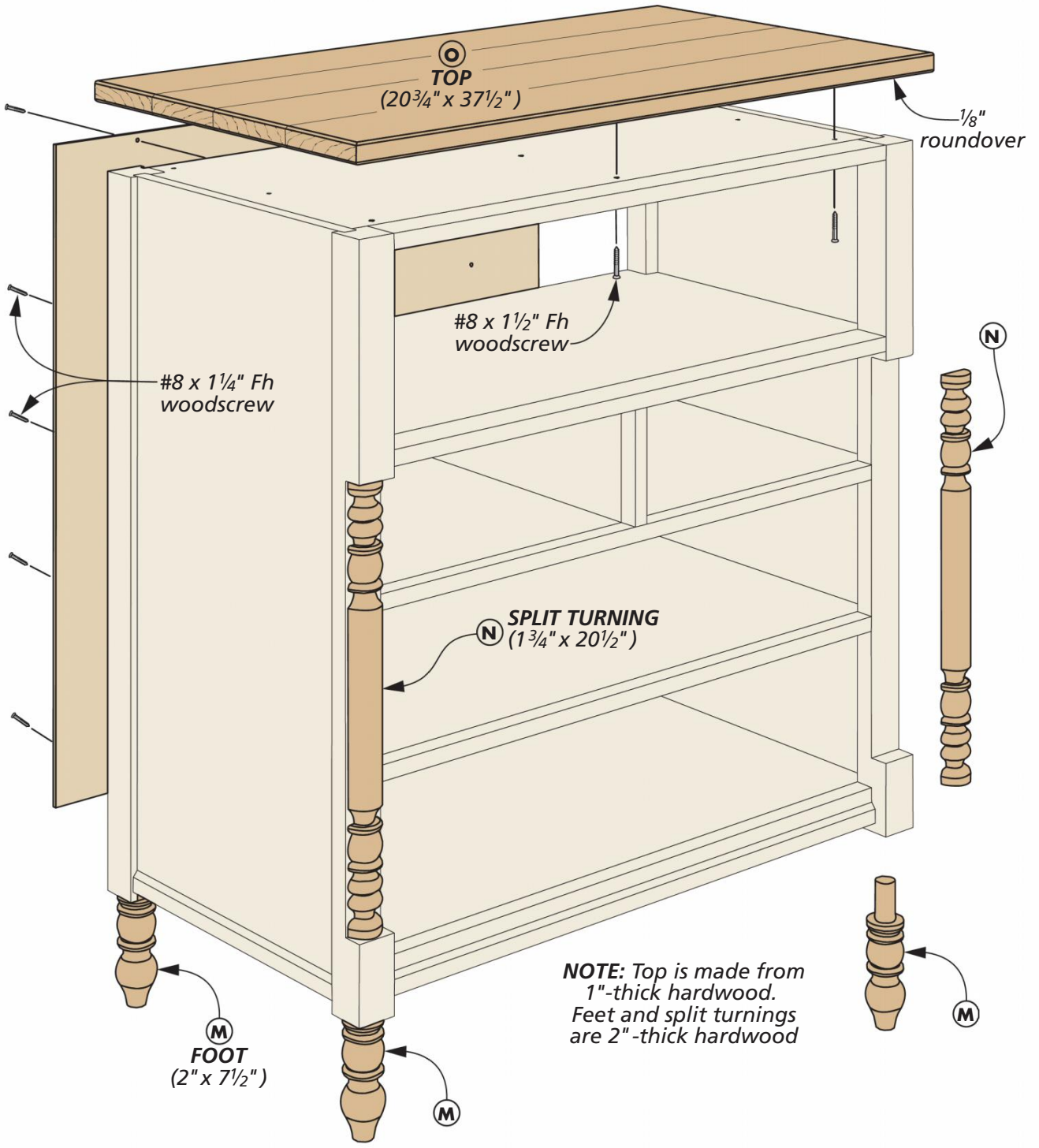

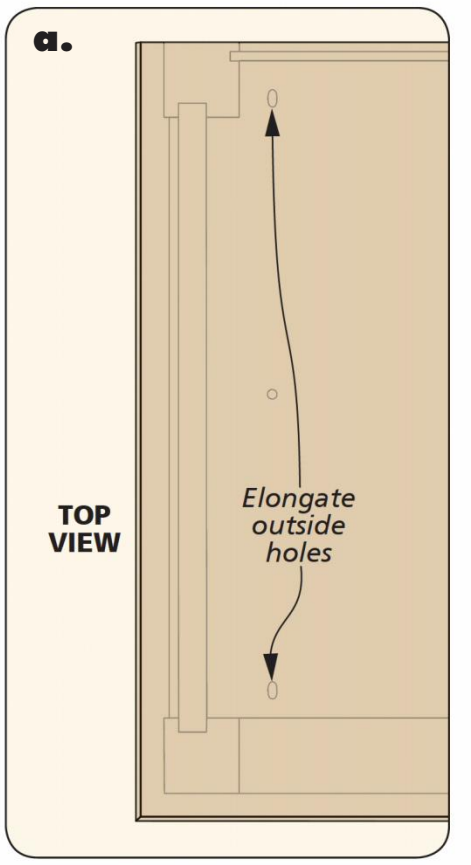

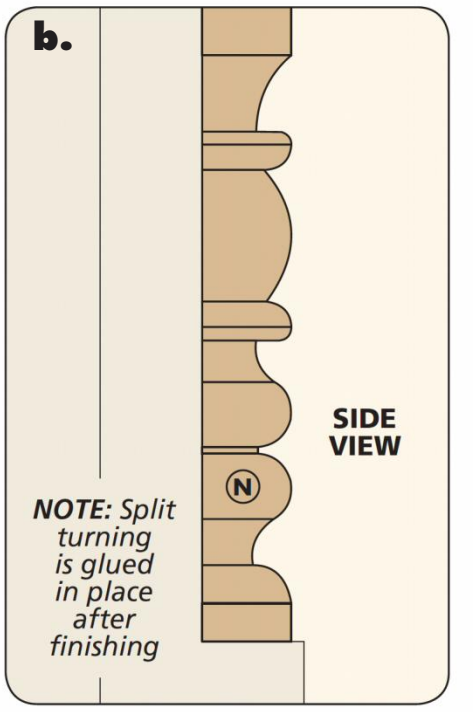

Making the TURNINGS & TOP

With the bulk of the case complete, you can shift your focus to some of the more intricate details of the chest. This will start with the turnings — a pair of split turnings for the notches in the front posts and the four feet. Then, you'll tackle the top.

FEET FIRST. Creating the feet is a straightforward exercise in turning. Start with four blanks, cut a little long. (I used the same 10/4 stock as the posts.) If you feel inclined, you can use the table saw to bevel each corner and make an octagonal blank. (I enjoy turning, so I skipped this step and opted to hog off more waste at the lathe.)

At the lathe, set your blank up in a drive center or chuck. Use a roughing gouge to turn the blank to a 2" cylinder. Then, use a parting tool to form a tenon on one end. This will fit into the holes you drilled in the bottom of the posts, so double check the size with calipers as you go.

PROFILED FOOT. With the tenon fitting into the hole, you're ready to turn the feet to shape. The profile I used can be seen on the next page. To keep the feet consistent and to help check my progress, I made a reverse template out of hardboard. Just use a combination of spindle gouges and scrapers to refine the shape. Don't worry too much about following the pattern exactly. Just make sure to get the four feet close in appearance.

Once the turning is done, use a parting tool to cut the feet to final length. Then, set them aside for finishing later.

SPLIT TURNING. Now that you're warmed up on the lathe, you can take care of the split turnings that fit in the notches on the front posts. These start as two extra-long blanks that are glued together with a piece of kraft paper in between them. After turning, the blank will be split apart along this paper-glue line.

Once the glue is dry, drill a hole on each end of the blank, slightly larger than the points on your live center and drive spur. This will prevent the pressure from the tailstock from splitting the blank along the glue line. As before, turn the blank round, then form the shape (shown to the right) using spindle gouges, scrapers, and sandpaper.

SPLIT IT APART. Once the profile is complete, use the parting tool to cut the blank to length. Then, remove the turning from the lathe and use a chisel to split the blank along the glue joint.

Scrape and sand any remaining glue and paper before staining and finishing the turnings. The split turnings and feet are stained darker than the rest of the chest (refer to Sources on page 66 for finishing info). Once the finish is dry, you can glue them in place. I drove a couple of long pin nails into each turning to hold it in place while the glue dried.

SOLID WOOD TOP

The top of the chest is made of full 1"-thick hardwood. This keeps it in theme with the heavy proportions that are found on the rest of the case.

GLUE UP. Because the top is fairly wide, I created the top from multiple boards rather than one large, wide plank. Start with your stock planed to thickness. Glue up the panel in two sections, using clamping cauls to keep the sections flat. Once each section is dry, glue them together for the final width and scrape or sand the gluelines flush.

SLOTTED HOLES. With the top glued up, you can cut it to size. A small roundover eases the top and bottom edges. Then, you can prefinish the top like the turnings.

Before attaching the top, slip the back into place and install it with screws driven into the dividers. The top gets attached to the top divider with screws.

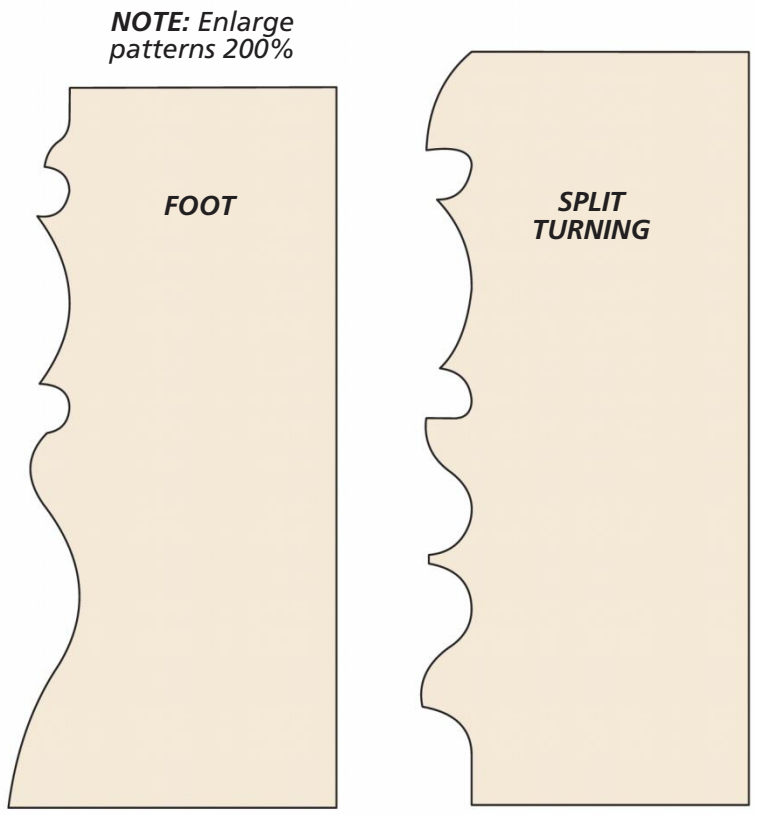

First however, I took a minute to elongate the outside holes I made in the top divider using a file. This allows the top to expand and contract with any variations in humidity.

MAKING A SPLIT TURNING

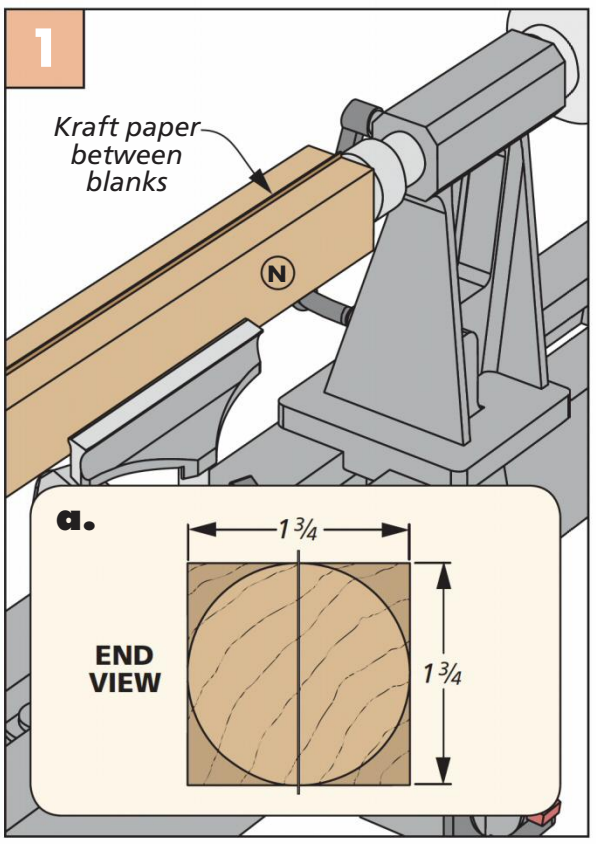

Split Blank. Glue up two blanks with paper in between and hold it in the lathe between centers.

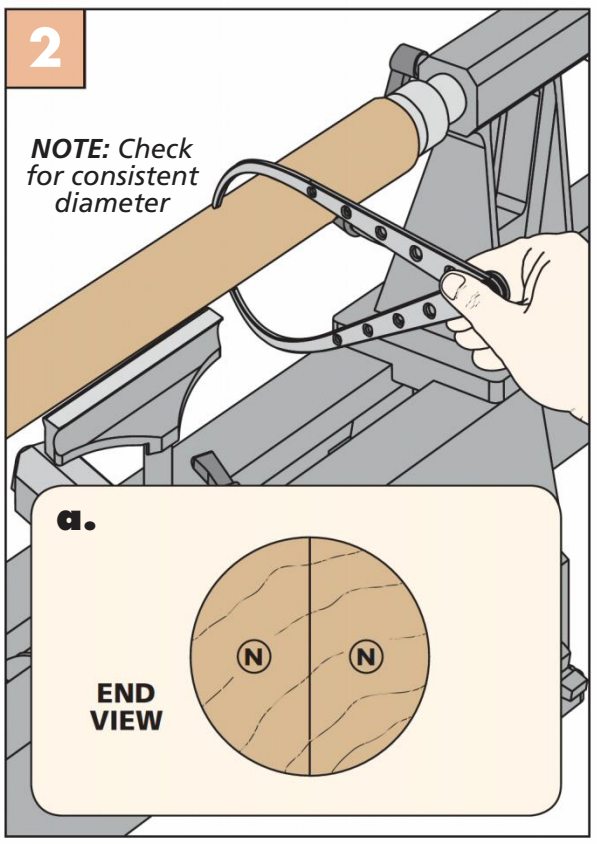

Turn It Round. Use a roughing gouge to turn the square blank into a cylinder, using calipers to verify a consistent size.

Woodsmith GO ONLINE EXTRAS

Reverse patterns are available at Woodsmith.com/247

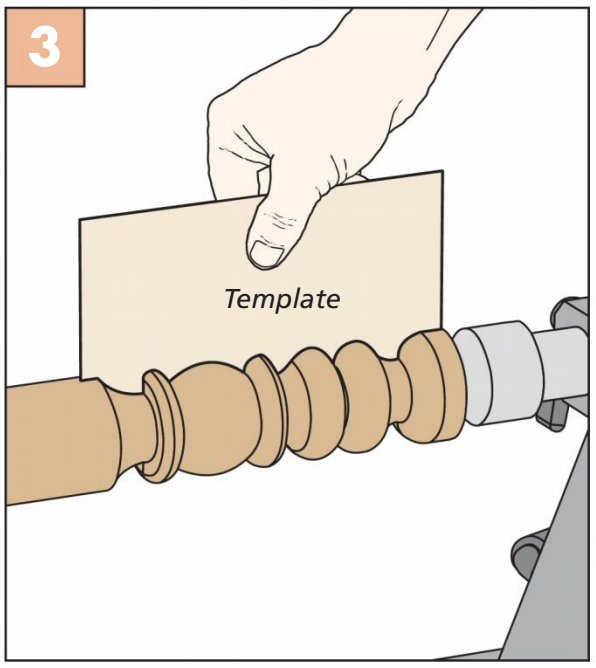

Turn the Shape. Turn the blank to shape. Check the profile using a hardboard template as a reference.

A nice set of DRAWERS

A chest of drawers without drawers is nothing more than a squatty bookcase. And that's the final step of this journey — to fill the case out with drawers. All told, there are five drawers that are graduated in size. The top drawer is the tallest, while the smaller split drawers are the shortest. The drawer sides and back are made from maple, while the drawer fronts are solid cherry.

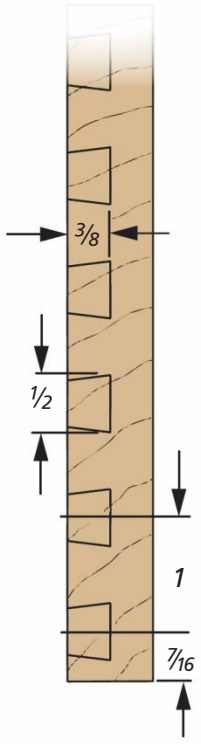

BIRDS OF A FEATHER. Even though the drawers are all different heights, there are some common dimensions. The bottom two drawers and the top drawer are all the same width. While that makes milling your stock straightforward, you do need to keep all the drawer parts in order. After milling the stock to size (be vigilant and cut the drawer fronts to match the openings), carefully label each part and each corner. This will come in handy for the next step — dovetailing.

DOVETAIL JOINERY. For drawer joinery, it's hard to argue with dovetails. They look great and are strong. Which is why I chose to use them on this project — these drawers are large and will be bearing a lot of weight when they're loaded up.

Half-blind dovetails (such as the layout shown in the margin at left and main drawing above) are fairly straightforward to cut using a dovetail jig. Take a look at the instruction manual that came with your jig for the details on setting it up for half-blind dovetails.

BOTTOM GROOVES. After the dovetails are cut, head over to the table saw. Here, you'll cut a groove near the bottom edge of each drawer part for the bottom (Figure 1). After pre-finishing the drawer fronts, assemble the drawers.

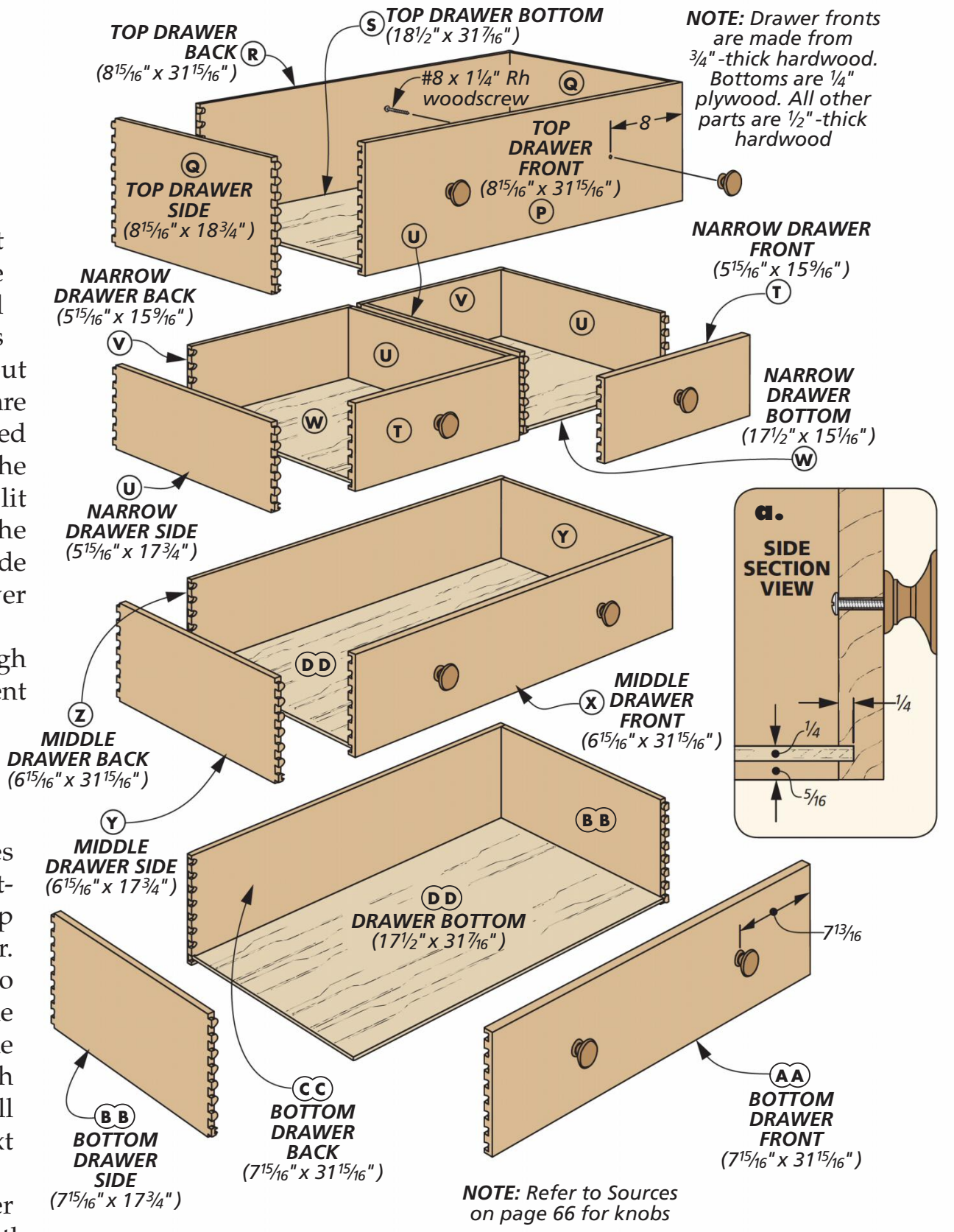

GROOVE FOR BOTTOMS

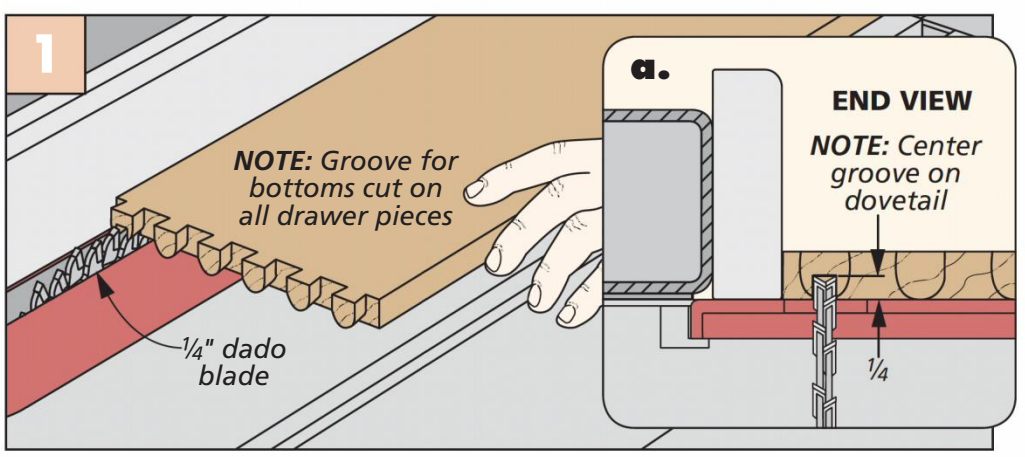

Bottom Groove. After cutting the dovetail joinery, install a dado blade in the table saw and cut a groove on the inside of each drawer part. Center the groove on the bottom dovetail of the drawer.

FINAL DETAILS

There are only a few things left before you can call this chest of drawers complete. The first is to install knobs on the front of the drawers. You could turn these if you'd like (they're 2"-diameter), or you can purchase some like I did (see Sources on page 66).

Hardwood drawer fillers get glued against the side panel in each drawer opening (main drawing and detail 'a'). I also installed drawer stops on the back of the drawers (so I could sand them to fine-tune the drawer fit). A couple of strips of low-friction tape on the areas where the drawers slide will help them operate smoothly.

With that, you can slide the drawers into the case and move your finished Empire chest into your home. W

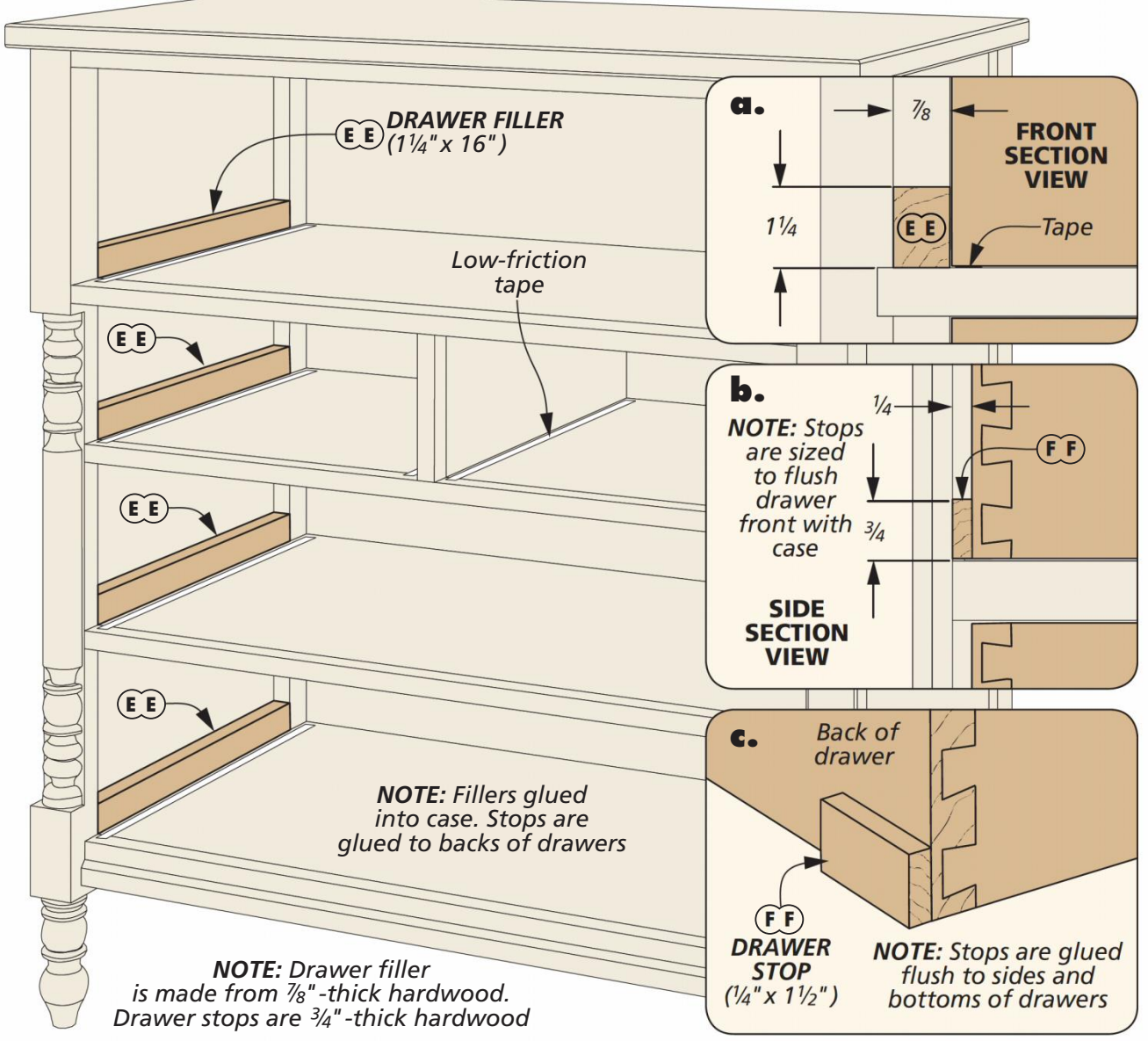

Materials, Supplies & Cutting Diagram

A	Posts (4)	2 x 2 - 35¼
B	Sides (2)	¾ ply. - 16¾ x 33¾
C	Small Fillers(2)	¼ x ¼ - 1½
D	Large Fillers (4)	¼ x ¾ - 1½
E	Lower Side Trim (2)	1 x 1¼ - 16
F	Dividers (5)	¾ ply. - 17½ x 34¼
G	Drawer Divider (1)	¾ ply. - 6½ x 17½
H	Back (1)	¼ ply. - 32½ x 33¾
I	Wide Edging (2)	¾ x 2¼ - 32
J	Narrow Edging (3)	¾ x 1¼ - 32
K	Divider Edging (1)	¾ x 1¼ - 6
L	Lower Trim (1)	1 x 1¼ - 32
M	Feet (4)	2 x 2 - 7½
N	Split Turnings (2)	⅞ x 1¾ - 20½
O	Top (1)	1 x 20¾ - 37½
P	Top Drwr. Front (1)	¾ x 8 15/16 - 31 15/16
Q	Top Drwr. Sides (2)	½ x 8 15/16 - 18¾
R	Top Drwr. Back (1)	½ x 8 15/16 - 31 15/16
S	Top Drwr. Btm (1)	¼ ply. - 18½ x 31 7/16
T	Narrow Drwr. Frts. (2)	¾ x 5 15/16 - 15 9/16
U	Nar. Drwr. Sides (4)	½ x 5 15/16 - 17¾
V	Nar. Drwr. Backs (2)	½ x 5 15/16 - 15 9/16
W	Nar. Drwr. Bttms. (2)	¼ ply. - 17½ x 15 1/16
X	Middle Dwr. Front (1)	¾ x 6 15/16 - 31 15/16
Y	Middle Dwr. Sides (2)	½ x 6 15/16 - 17¾
Z	Middle Dwr. Back (1)	½ x 6 15/16 - 31 15/16
AA	Bttm. Dwr. Fronts (2)	¾ x 7 15/16 - 31 15/16
BB	Bttm. Dwr. Sides (2)	½ x 7 15/16 - 17¾
CC	Bttm. Dwr. Back (1)	½ x 7 15/16 - 31 15/16
DD	Drawer Bttms. (2)	¼ ply. - 17½ x 31 7/16
EE	Drawer Fillers (8)	⅞ x 1¼ - 16
FF	Drawer Stops (10)	¼ x ¾ - 1½

- (24) #8 x 1¼" Fh Woodscrews
- (8) 2" Wooden Knobs w/screws
- Low-Friction Tape

ALSO NEEDED:
One 48" x 96" sheet of ¼" maple plywood,
Two 48" x 96" sheets of ¾" cherry plywood

1" x 4" - 96" Hard Maple (Two Boards @ 3.3 Bd. Ft. Each)

½" x 5" - 96" Hard Maple (Two Boards @ 3.3 Sq. Ft. Each)

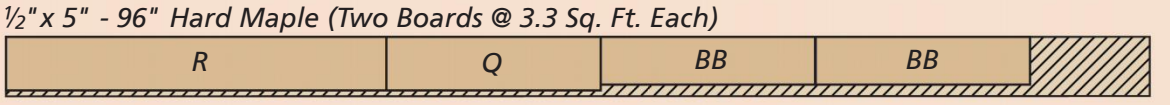

½" x 5" - 96" Hard Maple (Two Boards @ 3.3 Sq. Ft. Each)

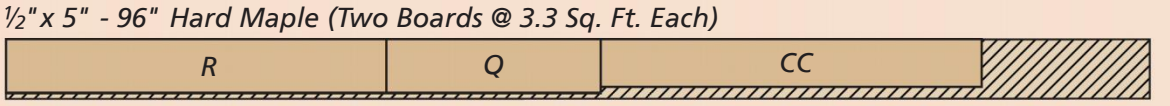

½" x 6½" - 60" Hard Maple (Two Boards @ 2.7 Sq. Ft. Each)

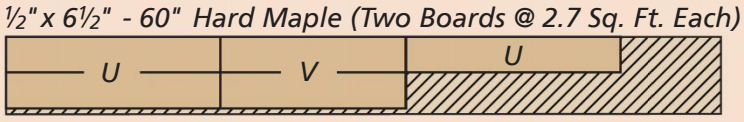

¾" x 7" - 84" Cherry (Two Boards @ 4.1 Bd. Ft. Each)

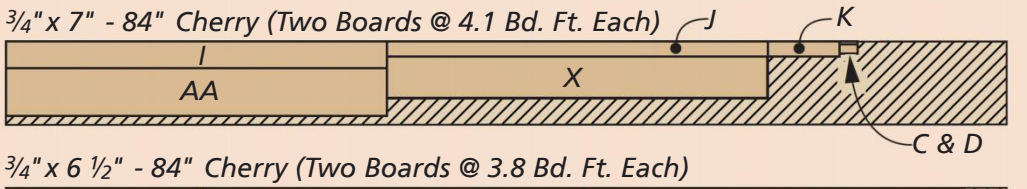

¾" x 6 ½" - 84" Cherry (Two Boards @ 3.8 Bd. Ft. Each)

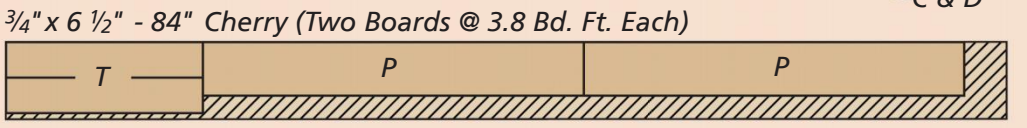

1" x 7" - 96" Cherry (Two Boards @ 5.8 Bd. Ft. Each)

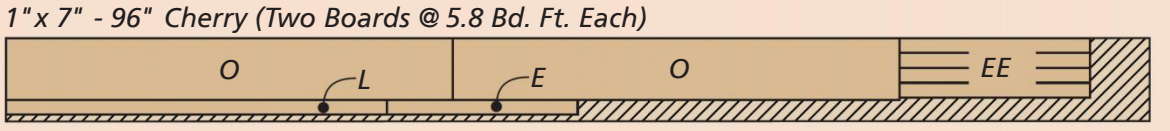

2" x 4½" - 60" Cherry (Two Boards @ 4.7 Bd. Ft. Each)

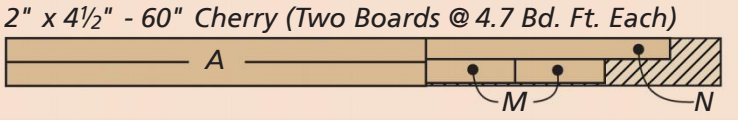

Cutting Threads in Wood

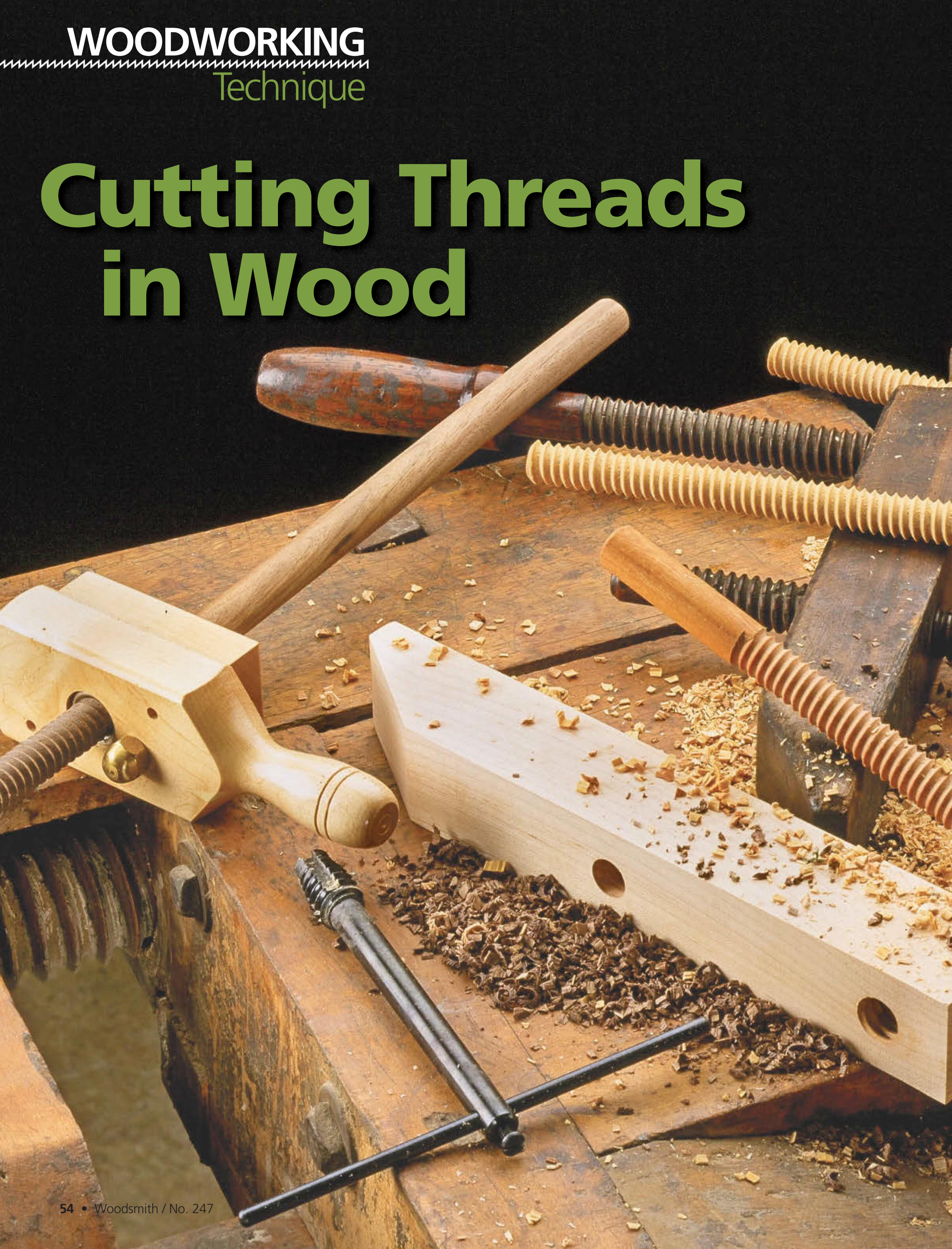

As a kid, I spent hours opening and closing the vise on my grandfather's workbench. It had wood jaws, a wood handle, and best of all, a large wooden screw.

Ever since then, I've been fascinated by projects with wood threads. Deep, V-shaped threads spiral around the outside of a wood cylinder. And these threads mesh together with threads inside a hole (right photo below).

But to be honest, I've always been a bit intimidated about building a project that required cutting wood threads. To prevent the threaded parts from binding, the threads would have to be identical — inside and out. And that sounded complicated.

As it turns out, I was right about one thing. To get the threaded parts to fit together smoothly, the size and spacing of the threads does have to be fairly consistent. But cutting uniform threads isn't as difficult as it sounds. In fact, all you need are two simple tools.

TAP & THREADBOX. The inside threads are formed by drilling a hole and gradually twisting a tap down into it. (The tap is the metal tool with a T-shaped handle in the main photo.) To cut the outside threads, you spin a threadbox (the wood box with turned handles) around a dowel.

SIZE. Threading tools are available as matched sets that range from ½" to 1½", refer to Sources on page 66. The size refers to the diameter of the dowel that can be threaded.

Veneer Press. Tightening a single wood screw applies all the clamping pressure that's needed for this small veneer press. With different sets of threadboxes and taps, you can make the wood screw in various sizes.

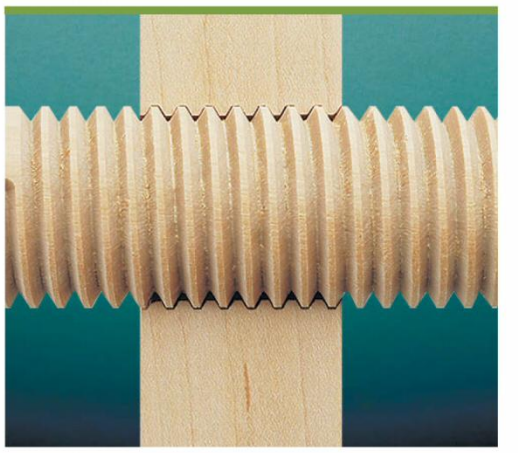

The threaded dowel must match the threads in the hole perfectly for a smooth, easy-to-use screw.

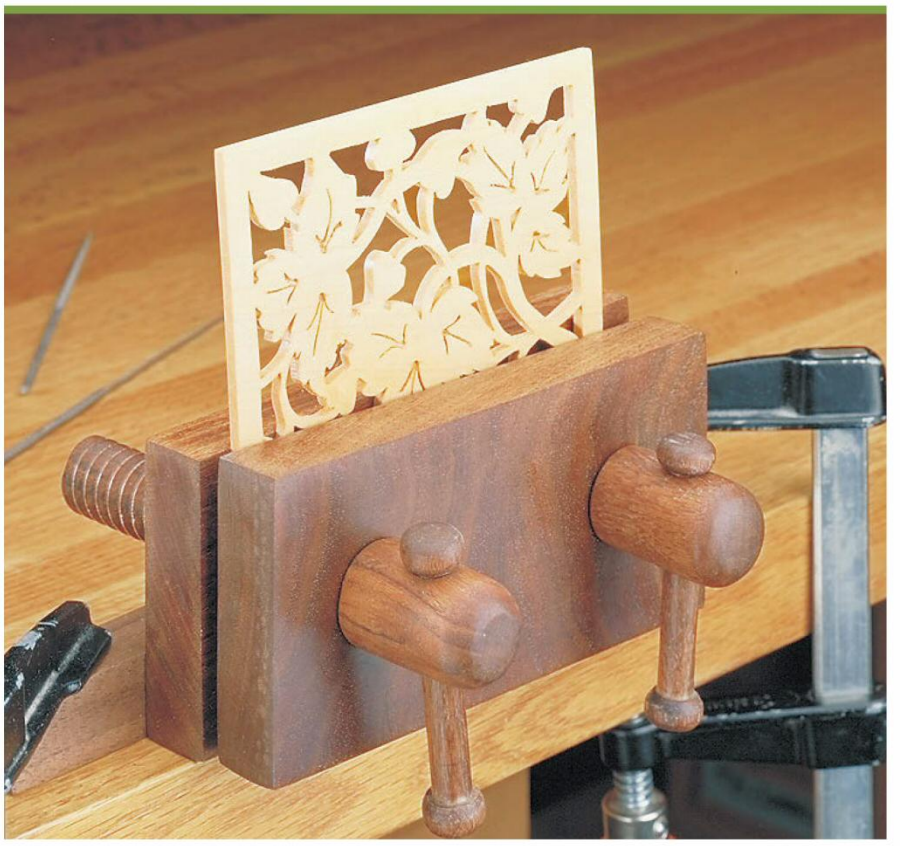

Benchtop Vise. The twin wood screws on this small, benchtop vise thread into tapped holes in the back jaw. Apply a couple of oversized caps and handles for a functional benchtop vise.

Small-Piece Clamps. Cutting small wood threads are ideal for small, delicate work such as these micro clamps. Just thread a short dowel and then tap threads in the lower nut.

Illustrations: Bob Zimmerman

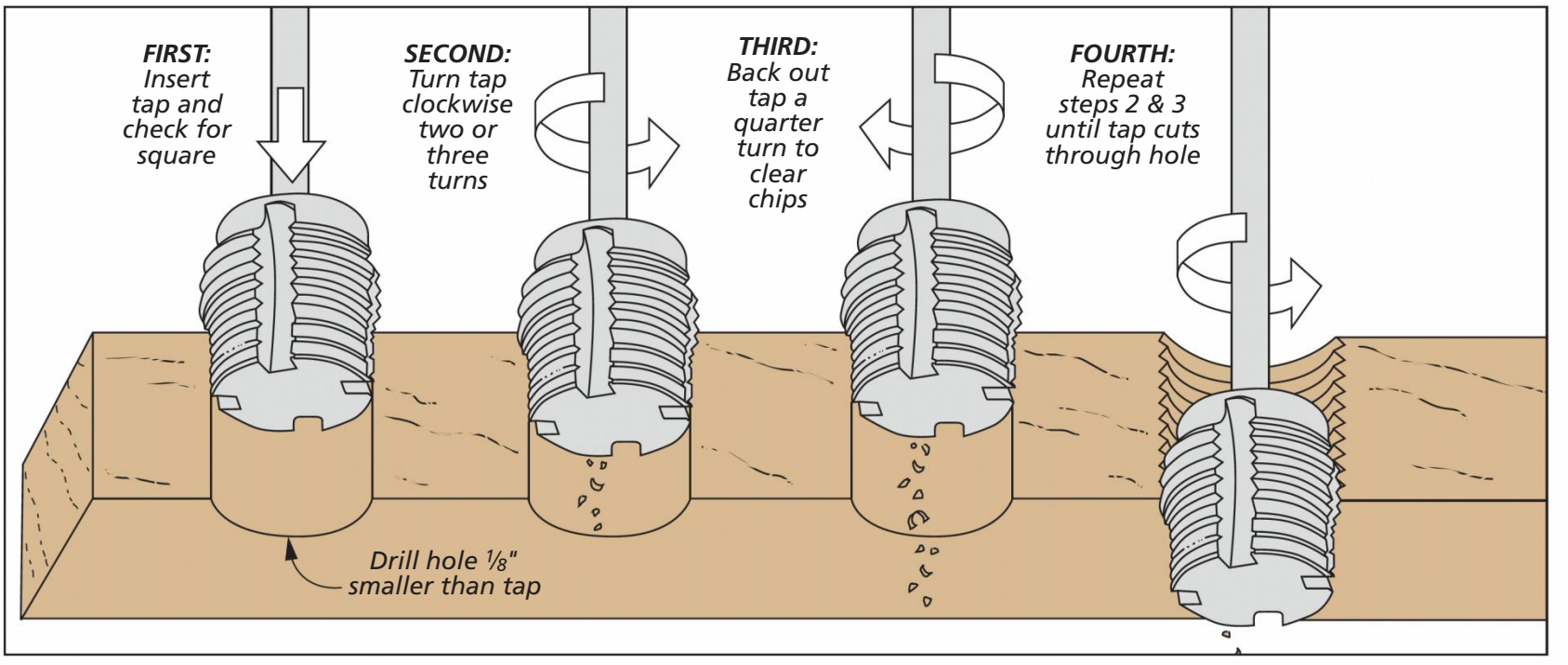

INSIDE THREADS

I begin a threading project by cutting the inside threads with the tap, as in the photo at right. Later, this makes it easy to test the fit of the threads on the dowel and make any necessary adjustments to the threadbox.

PILOT HOLE. The first step is to drill a pilot hole for the tap. As a rule, this hole should be 1/8" smaller in diameter than the nominal size of the tap. (For example, drill a 1 3/8" hole for a 1 1/2" tap.) This way, there's plenty of material left to cut away and form the threads.

LUBRICATION. The tap will fit quite snug in the hole. So to make it easy to turn, it's best to apply a generous amount of oil. (I use boiled linseed oil.)

CUT THREADS. After letting the oil soak in, it's time to cut the threads. The bottom end of the tap has a slight taper that helps center it in the hole, see first step in drawing above.

Even so, the important thing is to make sure the tap goes straight into the hole. (It will still cut if it goes in at an angle, but the dowel that threads into the hole will wobble or bind.) To accomplish this, twist the tap slowly and evenly in a clockwise direction, applying a small amount of downward pressure (second step).

At first, the tap will turn freely. But after a couple of turns, you'll start to feel resistance. At that point, back the tap out about a quarter of a turn to clear the chips, like you see in the third step.

Now, it's a simple matter of continuing to thread the hole all the way through the block, as shown in the fourth step.

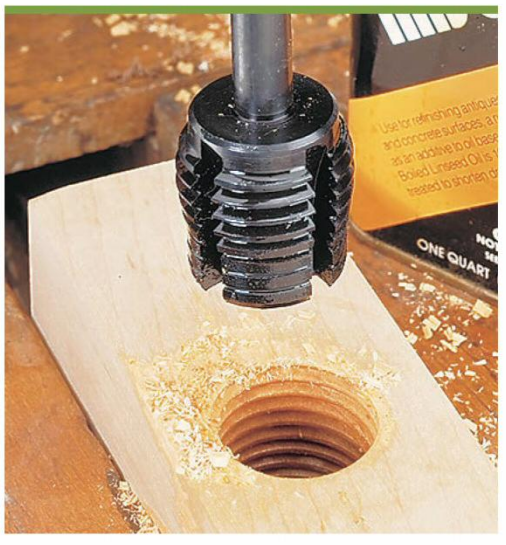

▲ A sharp tap combined with a closed-grain hardwood leaves crisp threads ready for a mate.

SELECTING DOWELS

The secret to ending up with crisp, clean threads is selecting the right dowels. For starters, stick with close-grained hardwoods like maple, cherry, walnut, or birch. Open-grained woods (like oak) have a tendency to chip out.

STRAIGHT. You'll also want to check that the dowel is straight. It's difficult to cut consistent threads if it's bowed. (I roll the dowel across my bench to check straightness.)

SHAPE. The shape of the dowel is also important. As the wood dries, the dowel may go out of round. (You'll know by the egg-shaped ends.) These dowels feed crookedly through the threadbox.

SIZE. One final consideration is the diameter of the dowel. Many dowels are slightly smaller or larger than their stated size. So you may want to take the threadbox with you to the lumberyard and check the fit.

OUTSIDE THREADS

Once the threads are cut inside the hole, you're halfway done. Now it's time to pick up the threadbox and cut the outside threads in the dowel.

TWO PARTS. The threadbox consists of two wood blocks that house a V-shaped cutter, see drawing below. The cutter fits into a notch in a threaded post. Tightening a nut on the end of the post locks the cutter in a "pocket" in the upper block.

Just a word of caution. The post is made of brass, so it's fairly soft. So to avoid bending (or breaking) it, be careful not to overtighten the nut.

METAL INSERT. The cutter is positioned right next to a metal insert in the upper block. This insert is threaded to match the threads cut by the tap. The reason is simple.

When you rotate the threadbox around the dowel, the cutter makes a groove that "catches" the threads in the insert. These threads then pull the cutter around the dowel. This creates a spiral groove in the tapped hole.

CHAMFER & OIL. To get the first thread started (and keep the fragile edge from chipping), I sand a chamfer on the end of the dowel. Here again, applying oil softens the wood fibers and makes it easier to cut the threads.

TEST CUT. The threadbox I used was already adjusted by the manufacturer. But it's still a good idea to cut threads in a scrap piece and check the fit of the dowel in the tapped hole.

Don't expect wood threads to fit as tightly as metal threads. (A good fit will seem a bit loose.) This prevents the threaded parts from binding when the wood expands or contracts with changes in humidity. Note: To improve the fit, adjust the depth of cut by sliding the cutter in or out.

CUT THREADS. Once you're satisfied with the fit, clamp the "real" workpiece vertically in a vise and lower the threadbox onto the end of the dowel. You'll feel a "thunk" as the cutter contacts the end of the dowel.

When cutting threads with the threadbox, use a quality dowel. As you start cutting, check the fit in the already cut hole and make adjustments as necessary for a perfect fit.

Now grip the threadbox by the handles and slowly rotate it in a clockwise direction. At the same time, apply steady, even pressure downward. There's not much resistance — about as much as using a corkscrew.

If the threadbox gets harder to turn, it's probably because chips have clogged the throat opening. To clear the chips, simply back off the threadbox about a quarter of a turn.

As you continue to turn the threadbox, it will work its way down the dowel, exposing the newly cut threads on the end.

THREAD SHAPE. The ridges on these threads are fairly sharp (detail 'a'). Because of this, they're a bit fragile, and they may chip with use. But that won't weaken the thread. The thick root of the thread that fits in the groove provides the strength.

UNSCREW THREADBOX. After you reach the desired length, back the threadbox off the dowel. Then run it back down one more time. I find this clean-up pass leaves the thread faces smoother and better-fitting. W

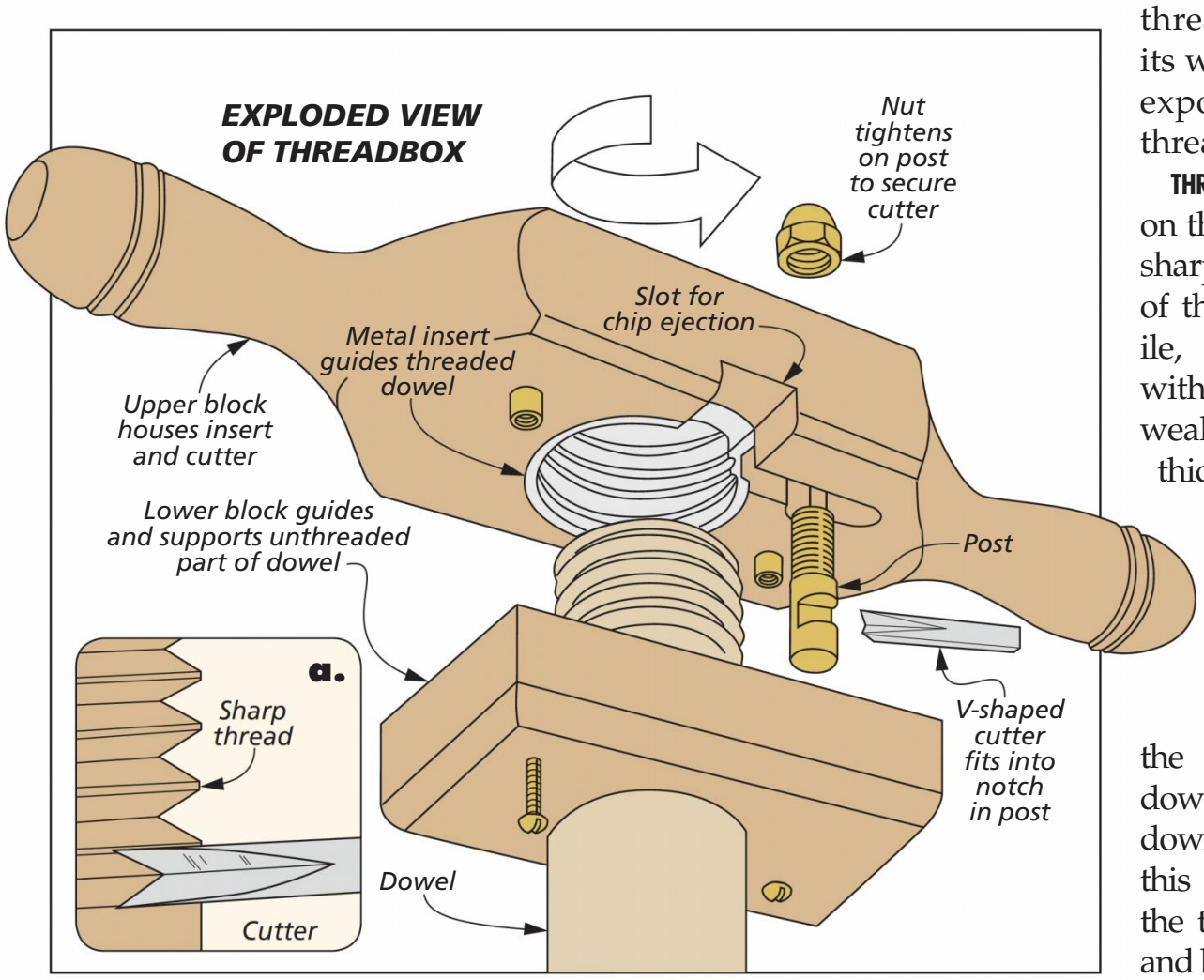

Drawknives & Spokeshaves

Some woodworking tools thrive with straight, flat surfaces (think hand planes) while others are meant to cut loose a bit. Drawknives and spokeshaves fall squarely in the second camp. As a result, these tools can be a joy to use and open up a new dimension to your projects. Their freeform nature can sometimes create an intimidation factor for new users. I also believe that spokeshaves and drawknives can be unfairly thought of as simply crude or rustic tools meant for "country-style" projects. Instead, my goal here

Written by: Phil Huber

is to introduce these two tools and show how you can use them in a variety of ways from coarse to refined.

DRAWKNIVES

While drawknives and spokeshaves are like cousins, it pays to look at them one at a time. Let's start with the drawknife. It has a long blade mounted between two handles bent in-line with the direction of the cut. My first exposure to a drawknife was in removing the bark from a log. So I thought that's all it was used for.

FAST WORK. Where a drawknife excels is quickly shaping a workpiece, as shown in the photo on the previous page. With forceful strokes, you can peel off long ribbons of wood while forming a shape.

On the other hand, a drawknife is equally capable of taking fine cuts. Used with finesse, it leaves a polished, slightly faceted surface that just begs to be touched.

Like many edge tools, you'll get the cleanest cuts when working with the grain of the wood. Here's where using a shavehorse can come in handy. It allows you to reposition a workpiece quickly and easily. But drawknives work equally well when the workpiece is secured in a bench vise.

BEVEL UP OR DOWN. The simple design of a drawknife frees you to use it in several ways. You can use the tool with the bevel up or down. Some woodworkers hold (very) strong opinions on this subject. I've found it's best to let the tool and the task at hand take the lead.

Here's what I mean. In general while using a drawknife, you want your shoulders in a relaxed, neutral position, not hunched up. So if that means using the drawknife bevel down, so be it. My drawknife works best with a bevel up orientation.

This is the approach I take when making cuts on flat or convex surfaces. This is shown in the upper right drawing.

When cutting into the valley of a curve, I'll flip the tool bevel down. The bevel facing down allows you to work much tighter curves, as in the lower drawing.

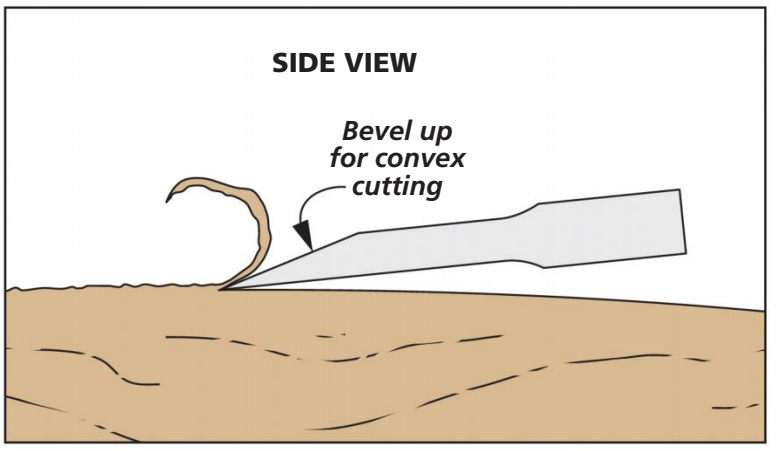

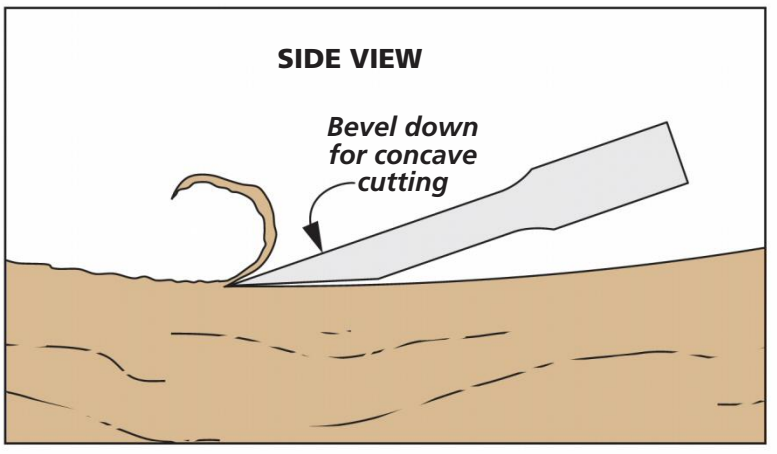

SLICE, NOT JUST PULL. The motion of using a drawknife allows you to use your arms, chest, and abs to drive the cut. But it shouldn't all be brute force. Take advantage of the full width of the blade as much as possible. Start the cut at one end of the blade and as you pull forward, slice along the length of the blade to finish at the opposite end.

Sure, it takes some practice to get the motion right, but the payoff is a smoother cut that isn't as hard on you. It also increases the life of your sharp edge.

SHARP WINS. Speaking of sharpening, just like a hand plane or carving knife, the results you get with a drawknife depend on the quality of the edge. The sharper the edge, the cleaner the cut. The catch is a drawknife won't fit in most honing guides and is tough to secure for sharpening. Instead, I use an approach based on the technique of chairmaker Brian Boggs. Shown in the left photo, I hold the drawknife with the blade up and a sharpening stone in the other hand. This braces the tool and gives me a better view while working through the grits.

Sharp as a Fiddle. Brace the drawknife against your chest, almost like a fiddle. Hold a sharpening stone in your other hand and stroke along the bevel and back of the blade, keeping your fingers back.

Illustrations: Bob Zimmerman

Pushing a metal body spokeshave offers better control as you navigate curves.

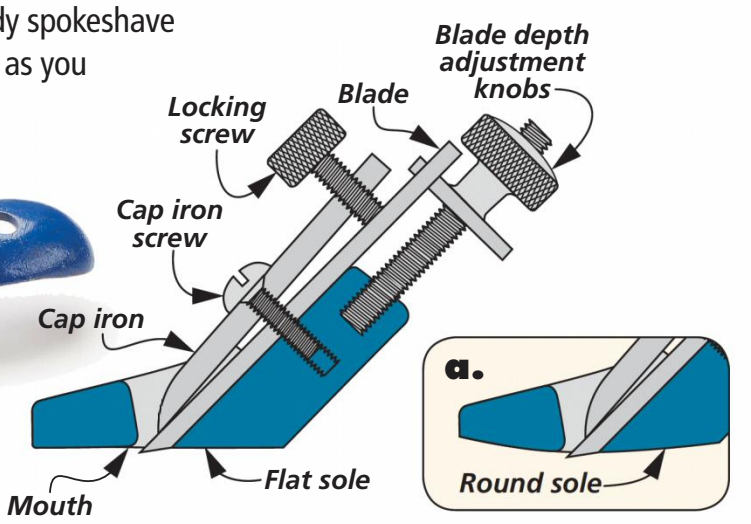

SPOKESHAVES

A spokeshave is a more familiar tool — though probably still not often used. Besides size, the main difference from a drawknife is how the blade is presented to the workpiece.

Instead of an exposed blade, the blade of a spokeshave is surrounded by the body of the tool. Much like a hand plane, the body provides a sole for an increased level of control.

That control pushes the tool more into a refining role. So while you can set up a spokeshave for taking relatively heavy cuts, it's still less than the heavy stock removal you get with a typical drawknife.

The primary advantage is that you can set the blade for a specific depth of cut and get consistent results. In addition, the narrow body makes the tool pretty nimble to work on all kinds of surfaces.

GO CONFIGURE. Spokeshaves come in numerous configurations. The two main forms are shown here — metal body and wood body. In addition, you can get spokeshaves with round soles for working inside tight curves or shaves with curved blades for forming round stock.

While the choices may seem dizzying, I'd recommend starting with a flat-bottomed spokeshave. This will give you a good idea of what the tool is capable of and allow you to get the hang of it. They're also much easier to sharpen and set up for fine work. The question then boils down to choosing a metal body or wood body shave.

METAL BODY SPOKESHAVES. You're more likely to find a spokeshave with a metal body when searching online or browsing a catalog. They typically offer better blade adjustments and hold the blade bevel down.

In use, the cutting action of these tools feels more like a hand plane. The metal body and handles give the tool good heft and help dampen vibration that could lead to chatter marks.

WOOD BODY. Spokeshaves with a wood body are an older style. They're more likely to turn up in antique shops and flea markets, though you can find some new models from smaller manufacturers. Wood body shaves hold the blade in a bevel up configuration (left photos and drawing). So they cut more like a low-angle block plane. The cut has a slicing, whittling feel to it.

The one shown here is one I made using a blade kit from *Veritas* (refer to sources on page 66). This setup offers excellent blade control. And I enjoy the process of making tools that I can use when building projects.

GET A GRIP. The wide handles of a spokeshave are one of its defining features, but can be a little misleading. You're tempted at first to grab the tool way out on the ends, like the handlebars on

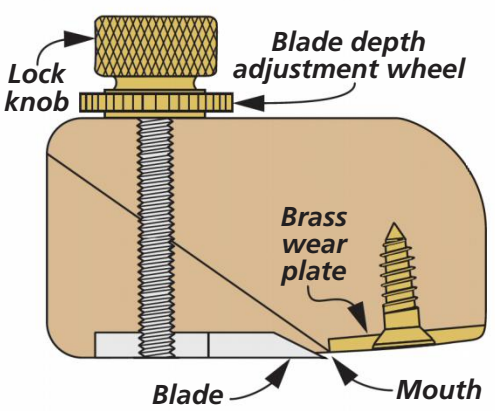

Wood body spokeshaves work with a shallow, slicing cut. The bevel up blade can be set for fine cuts and cleanly trims end grain as well.

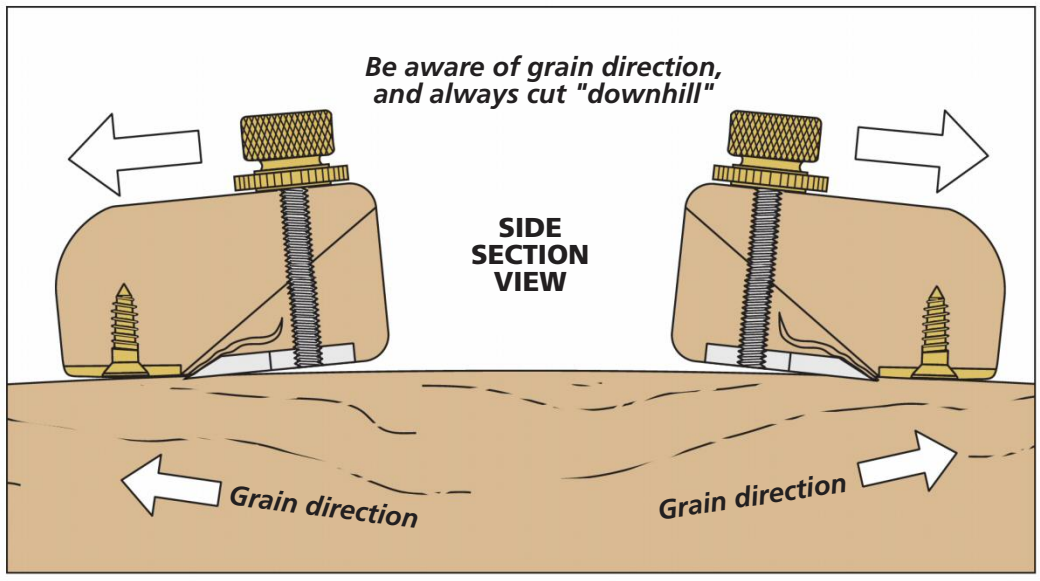

Setting a spokeshave for light cuts minimizes tearout and leaves the best surface. Holding the shave close to the blade offers you the highest level of control.

a bike. It may work, but you lose a lot of sensitivity.

Instead, what you need is more of a pinching grip up close to the blade on either side. The upper left photo on the previous page shows what I'm talking about.

This spokeshave has shallow indentations cast into the front and back of the handles that are ideal places for your index fingers and thumbs. Held this way, you can guide the spokeshave with subtle control to engage the blade and respond quickly to changes in grain direction or the angle of attack.

PUSH & PULL. I've found that a metal spokeshave works best when pushing it along the surface of the workpiece. My wood body shave can cut in either direction and usually depends on the material and task.

GRAIN DIRECTION. Just like with hand planes, you need to be aware of grain direction when using spokeshaves. This is especially the case when cresting the hill of a workpiece (upper left drawing) or the bottom of a valley. Here, the grain direction changes suddenly and you can easily end up with deep tearout. Pay attention and work from opposite directions as you approach these trouble spots. A card scraper and half-round file are better choices for working these transition zones.

No matter what, the spokeshave needs to be in top shape. For more info, check out the box below. So when you're ready to cut loose, pick up a spokeshave or a drawknife. With a bit of practice, you can taking your skills to a new level. W

STAY SHARP!

Like any edge tool, a spokeshave behaves best and is most enjoyable to use when the blade is razor sharp. The problem is the blades are small or narrow, so they won't fit in most honing guides. However, with a little ingenuity, some scrap material, and a few pieces of hardware, you can make these helpers to keep your blades on the cutting edge.

This guide grips the back edge of the blade for a wood-bodied spokeshave. The adjustable riser on the back fine-tunes the angle. The posts of the blade straddle most honing stones.

Woodsmith GO ONLINE EXTRAS

For jig plans, go to Woodsmith.com/247

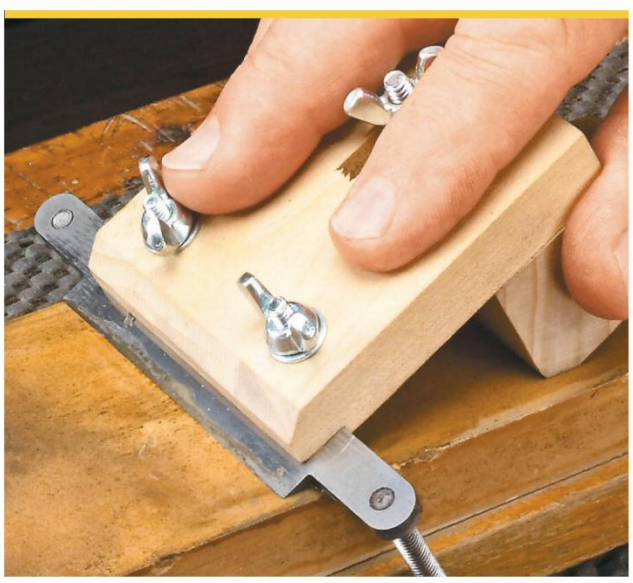

A two-layer hardboard block serves to "extend" the length of a metal body blade so you can hold it in a honing guide for fast, efficient sharpening.

Working with Small Parts

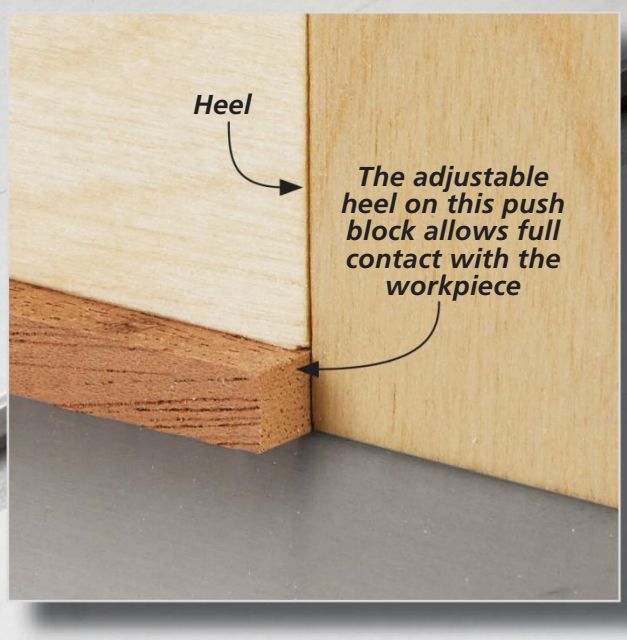

Often, the size of parts is relative to the size of a project. For example, when building a table, the parts are large. Likewise, when you start to scale down projects, such as the model train in *Woodsmith* 245, the parts get smaller.

When dealing with these small parts, the table saw might not seem to be the best tool. However, with some proper setup and technique, you can use your table saw to tackle these small parts. Here, I'll take a look at some of the best practices to make safe and accurate rip and crosscuts on the table saw.

Written by: Logan Wittmer

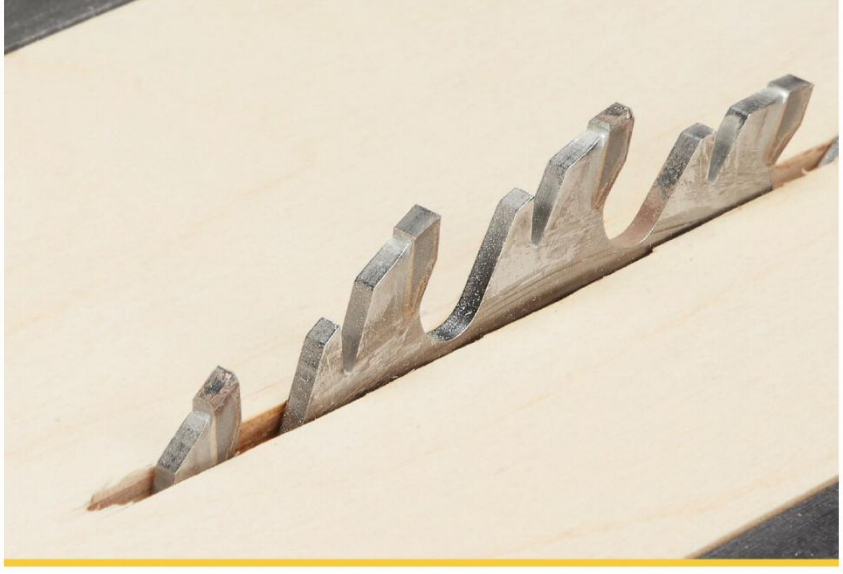

A fresh insert in the table saw increases safety when cutting small parts. It reduces the likelihood of the part catching on the insert, or getting caught between the insert and blade.

As a temporary fix, you can refresh your insert by using packing tape to close up the gaps. The packing tape is slick and allows workpieces to glide over it.

RIP CUTS

The first type of cut we'll look at are rip cuts. Ripping small parts to width can be tricky. First, you have to feed the workpiece safely. Second, you have to do this without having the piece fall into the opening in the insert or slipping under the fence. Here are some of the techniques I use to get the best results.

ZERO CLEARANCE. It's easy for small parts to get caught or stuck in chewed-up insert plates. To avoid this, I make sure to have a fresh, zero clearance insert in my saw. This doesn't have to be fancy. Usually, it's a shop-made insert, like the one seen above. This keeps my cuts clean and also keeps the workpiece from falling into the saw cabinet.

If my insert is still fairly fresh but I need to tighten it up for just a few cuts, I'll often reach for a roll of packing tape. As you can see in the top right photo, the packing tape can be used to temporarily close up the kerf in the insert while you make your cuts.

A SPECIAL PUSH BLOCK. One of the most important tools for making safe cuts is a push block that suits the task at hand. I've found with small parts, it's best to match the push block to the stock. Often, this means using a thin push block when making narrow cuts. Likewise, I use an adjustable push block to hold thin stock (such as in the main photo on the previous page). A push block with an adjustable heel allows the entire push block to be in contact with the workpiece, giving me more control.

SACRIFICIAL FENCE. When ripping thin stock (such as veneer or plastic laminate), I make sure my fence has no gap between the fence and the table. A piece of hardboard (lower left photo) addresses this.

SMALL RIPS. For ripping multiple (narrow) parts to the same width, I'll often use a stop block to set the width of the cut (right photo below). This gives you a cleaner cut and the pieces you're ripping don't get caught between the fence and the blade, where they may bind.

When cutting thin stock or laminate, the workpiece can slip under the fence. A quick fix is to attach a sacrificial fence made from hardboard using double-sided tape.

To rip multiple pieces of thin stock, I'll use the back side of a featherboard as a stop block. After making a cut, move the workpiece against the stop (inset photo) and reposition the rip fence before making another cut.

CROSSCUTS

When I'm crosscutting at the table saw, I find the way to get the most accurate results is to use a crosscut sled, and cutting small parts is no exception. However, a small parts sled needs to be size appropriate. And depending on the type of work you're doing, you may want to make some special modifications to the sled.

MITER GAUGE FENCE. The simplest form of small parts sled that I use is a fence and base on my miter gauge. You can see this in the top photo below. I like this type of sled for two reasons. First, it's easy to make. (It's a plywood fence face with a hardboard base.) Second, you get some of the benefits of a miter gauge — it stores easily and you can adjust the miter gauge for any angle cut you need.

With that being said, this simple miter sled doesn't have a lot of options for accessories. So, when I need something a little more robust, I take a slightly different approach.

COMMERCIAL SLED. The next step up from a simple miter gauge fence is a commercially made small parts sled, like the one shown below (left) from *Rockler*. What I like about this type of sled is that it's sized to handle small workpieces. It's much smaller than my normal crosscut sled and feels like it's right for the task at hand.

I also like the fact that most small parts sleds have a series of T-tracks along the base of the sled and along the fence. This is particularly helpful when adding accessories such as stop blocks and hold-downs (more on that later).

In addition, a sled like this usually has a replaceable insert. This means that you can always keep the kerf in the base of the sled tight and keep your cuts clean.

SHOP-MADE SLED. If your desire is for ultimate luxury in a small parts sled, you can't beat a shop-made cutting system (lower right photos). A system like this offers micro-adjustments and almost feels like it scales your table saw down to a smaller level — a nice benefit when working with small parts.

The great thing about a shop-made sled is that you can customize it to do what you need. You can add T-track wherever you want and make accessories like shop-made hold-downs. You can even use some of these sleds to perform rip cuts (such as the inset photo below).

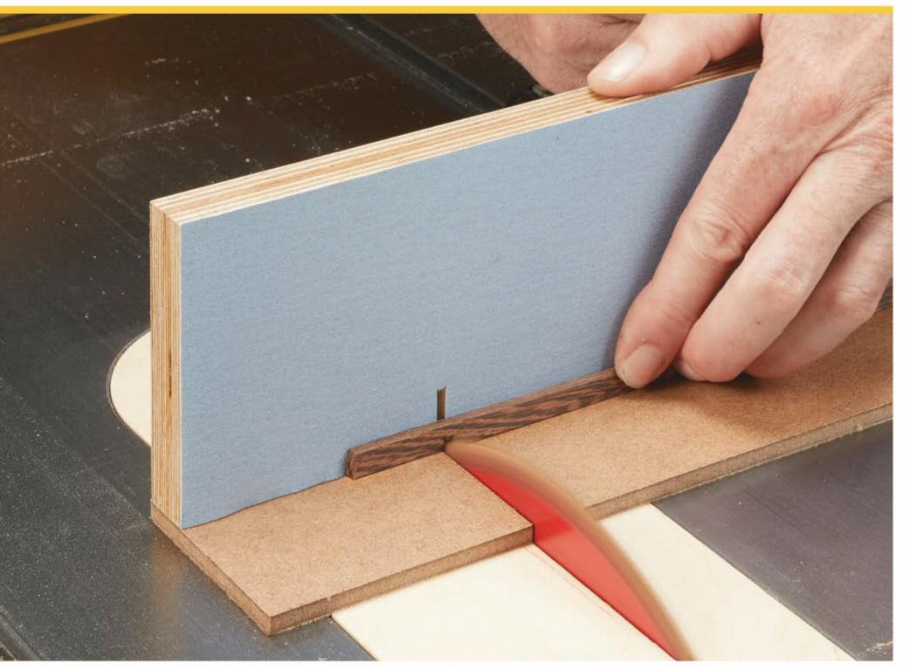

Good. Adding a hardboard base to a plywood miter gauge fence is a quick trick I use when cutting small parts. The base and fence are zero clearance for clean cuts.

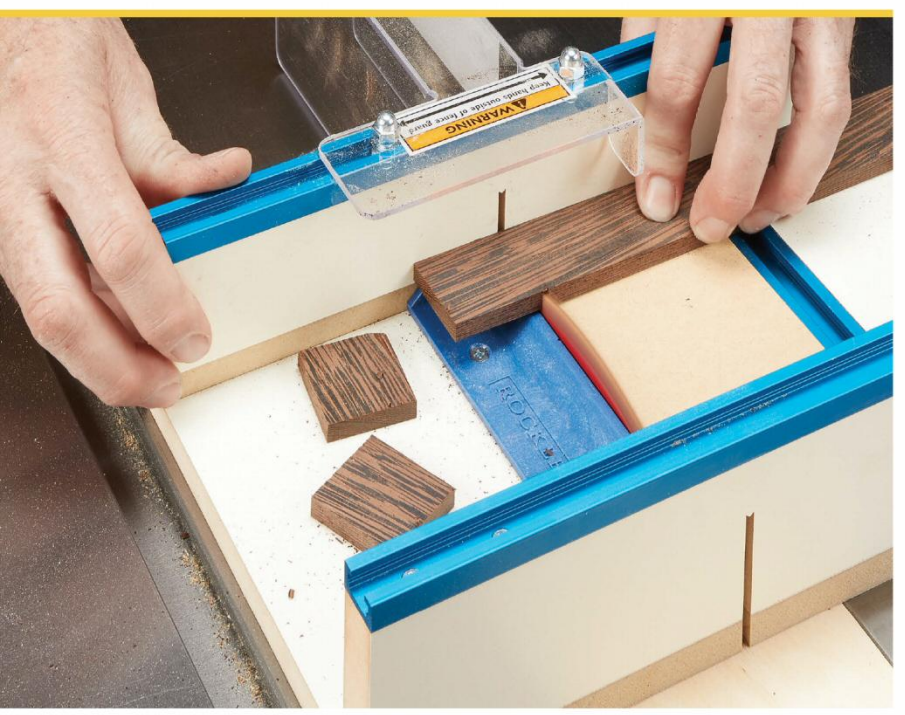

Better. A commercially available small parts sled has handy features like a replaceable zero-clearance insert as well as T-track for accessories.

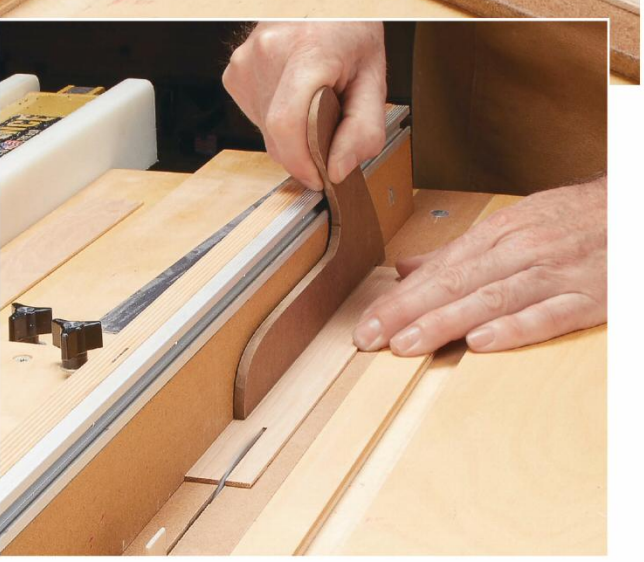

Best. A cutting system like this (*ShopNotes* Issue 105) scales your table saw down to a smaller size. It features accessories for all your table saw cutting tasks, like a sled for precision crosscutting and a micro-adjust fence for ripping (right).

LITTLE PIECES

Now that we've talked a little about some of the tools to help you achieve precise, clean, and safe cuts at the table saw, let's talk briefly about securing your workpieces before and after making the cut.

HOLD-DOWN. One problem while making a cut on a small part is securing the part after the cut is made. Small parts can "float" away (or into) the blade. Holding your workpiece down while making a cut is often as simple as using the eraser end of a pencil, as seen in the upper left photo.

Another option for keeping workpieces in place is to simply tape them to your sled while making a cut (upper right photo). If your sled is equipped with T-track, a hold-down (shop-made or commercial) also works well to secure pieces.

PARTS COLLECTION. If you've ever needed to make multiple parts the same size (such as making parts for toys), you know that as you cut them, they tend to stack up and can make a mess on your saw. Or worse, if they're round, they roll onto the floor. To wrangle small parts and keep them from running off, take a look at the box below for a simple add-on to your crosscut sled.

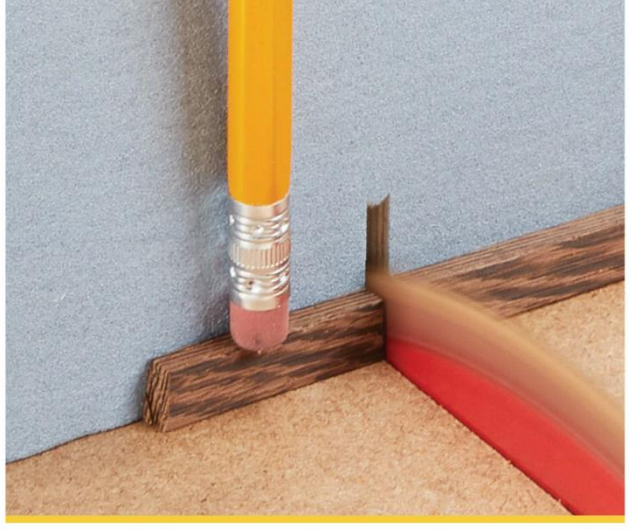

A pencil eraser easily holds workpieces in place while your making cuts. The eraser is grippy enough to give good control of the part.

In some instances, I don't have a free hand to hold a pencil while I make a cut. Here, a piece of tape, such as blue painter's tape, comes to the rescue.

PROPER BLADE. The final key (and maybe the most important) to getting quality cuts on small parts is to select the right blade. When ripping, I prefer to use a thin kerf blade. This style of blade takes less effort to make a cut. And for ripping small parts, it just seems to work better.

For crosscut blades, I reach for a fine-tooth crosscut blade. The key to clean cuts is to make sure the blade is sharp and to use zero-clearance inserts to keep chipping to a minimum. For really splintery woods, it helps to score your cuts with a knife, such as in the right photo.

For thin, splintery woods, lightly scoring the cutline with a knife reduces chipping from the saw blade.

Cutting small parts may not be something you do often. But, when the need arises, you'll be glad to have these tips on hand to ensure the best results. W

SMALL PARTS CATCHER

Allowing small parts to collect around your spinning table saw blade can become dangerous. The vibration from your saw can cause the parts to work their way into the blade and become a mini projectile across the shop. You can avoid this problem by crosscutting your parts with a cutoff sled with a small parts bin add-on. It consists of two parts — a platform on one side of the blade to raise your workpiece up and a small trough on the other side to catch the pieces. When a workpiece is cut, it falls down the beveled edge to be collected in the trough. That way, you can continue to make your cuts and avoid any workpieces coming into contact with the blade.

A high tooth-count blade coupled with the catch tray on the sled keeps small parts from wandering away while you work. This version attaches to the T-track in the sled fence and uses T-bolts and knobs to hold it in place.

Product Showcase

SUPER MET-AL Wood Filler Floor Repair Stick

Our specially designed Floor Repair Stick will give you a professional look when repairing scratches and nicks on Wood, Concrete, Laminate, Vinyl floors and surfaces. Made in USA. FREE Samples Call: 1-800-851-8464

www.skmproducts.com

Maine Coast Workshop

Take a fun one- to six-day woodworking vacation in "the prettiest village in coastal Maine." Hands-on classes taught by world-class masters for all skill levels. Camaraderie, Discount Lodging. Learn in a week what would take years on your own!

(434) 907-5427; www.mainecoastworkshop.com

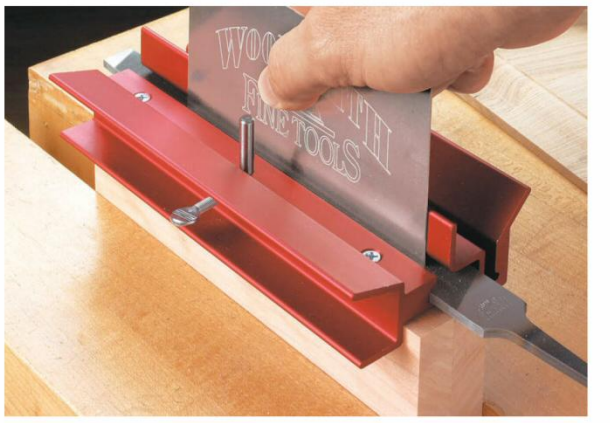

Woodsmith Cabinet Scraper System

The Woodsmith Cabinet Scraper System offers a fool-proof method for getting a consistent, razor-sharp edge using only a few simple tools. The secret is in the Woodsmith jig — a unique tool that lets you file the edge and then create a bur.

https://store.woodsmith.com/product/cabinetscraper

MAIL ORDER SOURCES

Project supplies may be ordered from the following companies:

Amazon.com

Fenchel Shades
715-246-2233
fenchelshades.com

The Home Depot
800-466-3337
homedepot.com

Kennedy Hardware
800-621-1245
kennedyhardware.com

Lee Valley
800-871-8158
leevalley.com

McMaster-Carr
630-833-0300
mcmaster.com

Rockler
800-279-4441
rockler.com

Sundial Wire
413-582-6909
sundialwire.com

Tools for Working Wood
800-426-4613
toolsforworkingwood.com

Woodcraft
800-225-1153
woodcraft.com

Sources

Most of the materials and supplies you'll need to build the projects are available at hardware stores or home centers. For specific products or hard-to-find items, take a look at the sources listed here. You'll find each part number listed by the company name. See the left margin for contact information.

NAILS IN THE SHOP *(p.10)*

- **Rockler**
  Wrought Nails 32366
- **Tools for Working Wood**
  Cut Nails . . . . . BT-FFIN.XX

PET BED *(p.20)*

- **Amazon**
  28" x 18" Bed B015ELWK6G

The pet bed was finished with a couple coats of clear lacquer.

SHAVEHORSE *(p.26)*

- **McMaster-Carr**
  Flange Bearings 6338K422
- **Woodcraft**
  1"-6 Threading Kit 12T15

The shavehorse has a couple coats of wipe-on oil finish.

FLOOR LAMP *(p.34)*

- **McMaster-Carr**
  Socket Head Screws .90128A250
  Tapping Inserts 92105A100
  ⅜" Brass Rod 8953K149
  ½" Brass Tube 7782T133
  ¾" Brass Rod 8953K95
- **Sundial Wire**
  Cord Set. CS182RBREC6
  Black Socket . . . . . .SKBKBK
- **Home Depot**
  ⅜" Lamp Nipple 215872
- **Amazon**
  Fabric Glue B07R5T2Y6N

The adhesive-backed styrene and 7" shade rings are available at *Fenchel Shades* website. The lamp was stained with *Bartley's* "Brown Mahogany" gel stain. After staining, the lamp was sprayed with a couple of coats of lacquer. The shade fabric is from a local fabric store.

SHOP STOOL *(p.40)*

The shop stool was finished with two coats of *General Finishes* Seal-a-Cell oil finish.

EMPIRE CHEST *(p.44)*

- **Kennedy Hardware**
  Cherry Knobs C-13

The case of the chest was finished with *Varathane* "Traditional Cherry" gel stain. The feet, turnings, knobs, and top were finished with *General Finishes* "Mahogany" oil stain. After staining, the entire chest was sprayed with a couple of coats of lacquer.

WOOD THREADS *(p.54)*

- **Woodcraft**
  Woodthreading Kits . . . . . varies

DRAWKNIVES & SPOKESHAVES *(p.58)*

- **Lee Valley**
  Sm. Spokeshave Kit. . . . 05P3340

CUTTING SMALL PARTS *(p.62)*

- **Rockler**
  Small Parts Sled 55916

Changing the way you work with your router.

FREE Shipping! Call 800-533-9298.

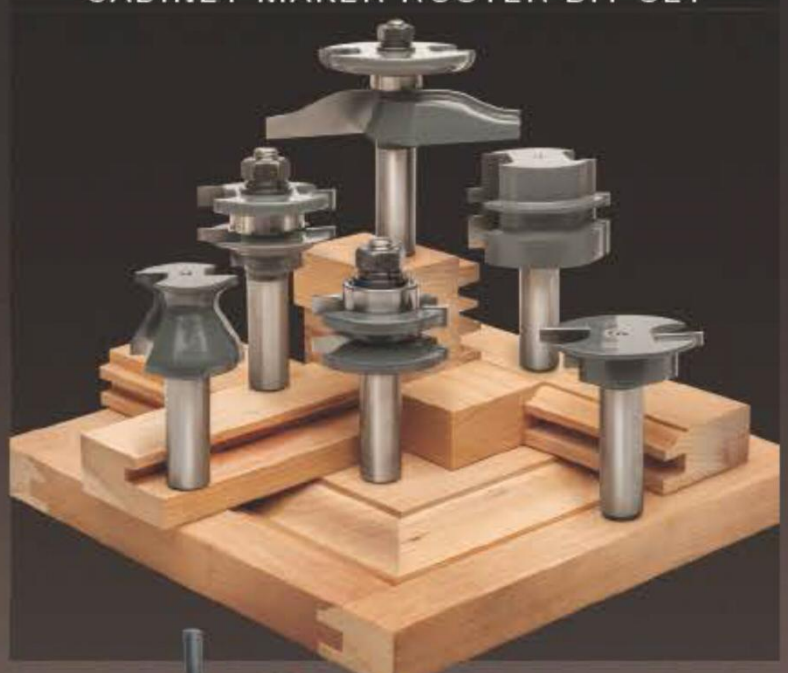
CABINET MAKER ROUTER BIT SET

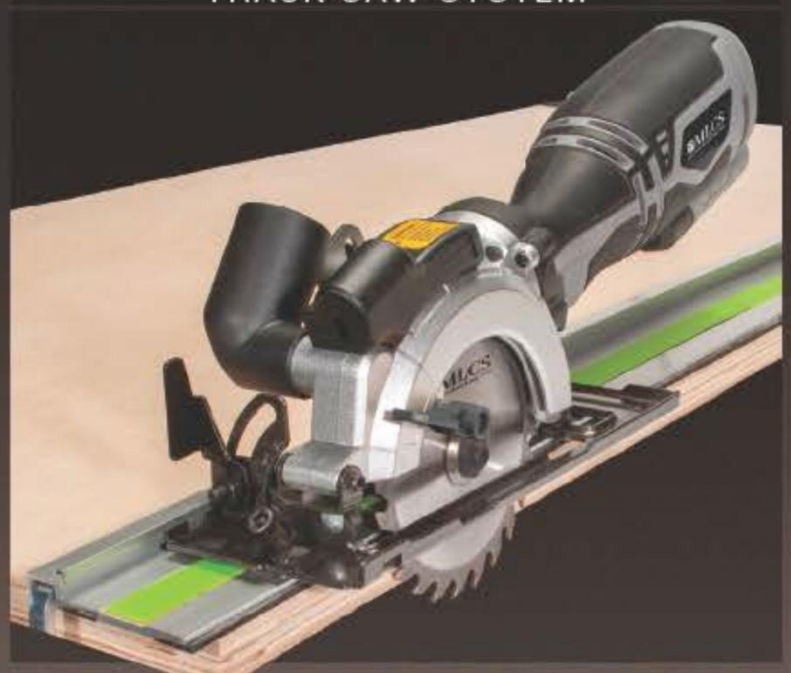
TRACK SAW SYSTEM

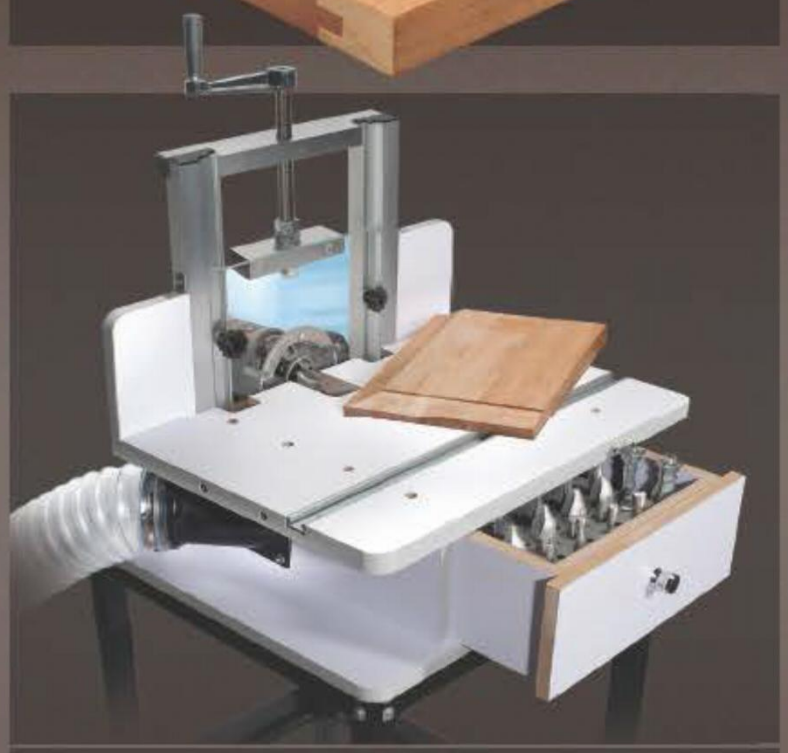
HORIZONTAL ROUTER TABLE

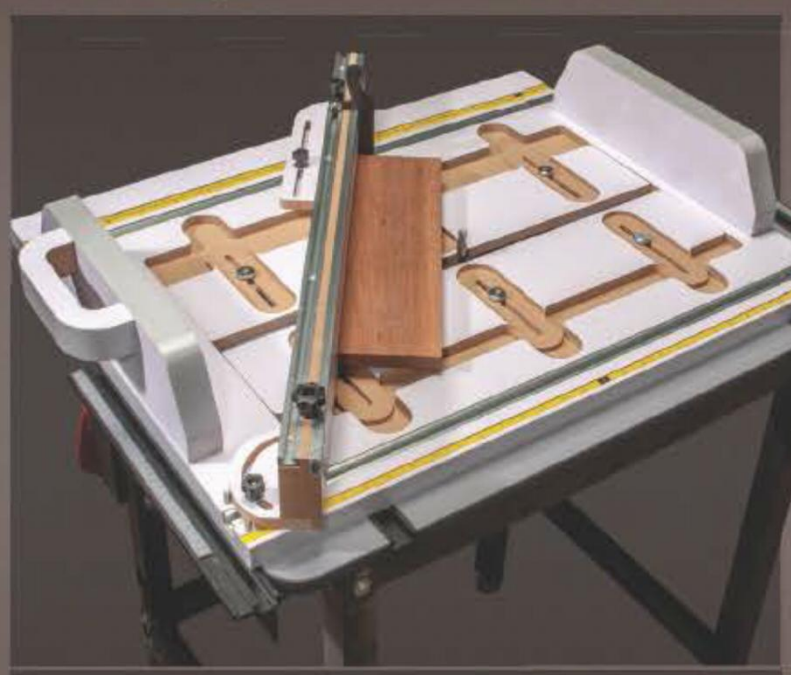
ZERO CLEARANCE CROSSCUT SLED

MLCS

mlcswoodworking.com

THE BENCHMARK OF EXCELLENCE

For more than 90 years, Powermatic has provided generations of expert woodworkers with the tools and confidence needed to create and inspire world-class craftsmanship by redefining the standard of quality and performance.

STEP UP TO THE GOLD STANDARD.

VISIT POWERMATIC.COM
FOR MORE INFORMATION AND A DEALER NEAR YOU

JPW INDUSTRIES

POWERMATIC

THE GOLD STANDARD SINCE 1921™

Woodsmith

Back Issue Library **Online**

An Incredible **VALUE!**

- ✓ Access every issue of Woodsmith ever published — over 228
- ✓ Get over 4,000+ projects, tips and technigues.
- ✓ Enjoy instant online access on your computer, laptop — even tablet.

Order for **$79**

Get the USB Flash Drive for $20 MORE!

LEARN MORE at www.woodsmithlibrary.com

Sign Up for Free Weekly eTips

Desktop

- Get a video tip sent to you every week
- Includes a printable, step-by-step tip
- Ready when you are — on any device

Laptop

Tablet

Smartphone

Sign up today at Woodsmith.com